MS-2001
Dual Channel Ultrasonic Level Monitor

Installation & Operation Manual

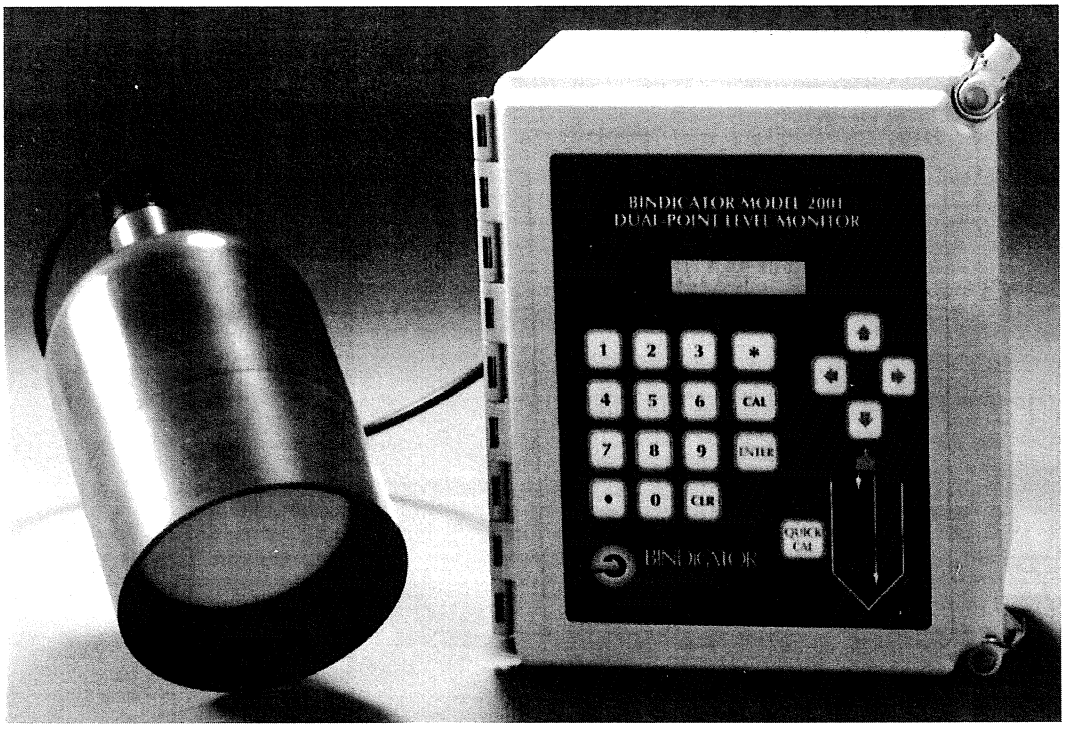

BINDICATOR
150 Venture Boulevard
Spartanburg, SC 29306
Phone: (864) 574-8060, **Fax:** (864) 574-8063
Customer Service: (800) 778-9242
Internet: http//www.bindicator.com
email: sales@bindicator.com

7/01 - Rev. D

Copyright ©1995 BINDICATOR®

SON280003

NOTE:

To insure all warranties expressed or implied are allowed, it is important that the unit be installed and calibrated per this manual. Follow all instructions starting in SECTION 1.0 on page 3 concerning verifying equipment and operation, installation instructions and notes and wiring instructions. Once this is accomplished you may proceed to the quick calibration procedure in SECTION 4.0 on page 8.

BINDICATOR
150 Venture Boulevard
Spartanburg, SC 29306
Phone: (864) 574-8960, Fax: (64) 578-7308
Customer Service: (800) 778-9242
Internet: http//www.bindicator.com
email: sales@bindicator.com

Copyright© 1995 Bindicator Company

TABLE OF CONTENTS

SECTION 1. UNPACKING INSPECTION:.....5

SECTION 2. APPLICATION/INSTAXLLATION CONSIDERATION.....6

SECTION 3. INSTALLATION.....9

Mechanical.....9
Electrical.....9
System Start Up.....9
Mounting Sensors.....11

SECTION 4. QUICK CALIBRATION.....13

SECTION 5. CALIBRATING THE OUTPUT.....15

Setting the 4/20 ma output(s).....18
Calibrating the relay outputs:.....19

SECTION 6. SPECIAL DISPLAY FUNCTIONS.....22

SECTION 7. TROUBLESHOOTING AND DIAGNOSTICS.....25

Actual Distance.....25
Temperature.....25
Sensor Firing Frequency.....25
Sensor Amplitude.....26
Cycles in Burst.....27
Receiver Gain.....27
Time Variable Gain.....27
Signal-to-noise Ratio.....28

SECTION 8. LEVEL MONITOR PARAMETERS/FUNCTIONS.....29

Basic setup group - each sensor posltion.....29
Display group - each sensor position.....30
Signal processing group - each sensor position.....30
Universal group - global.....31
4-20 output group - output.....31
Relay output group - output.....32
General operation.....32
Display modes.....32
Access level.....33
Resetting defaults.....34
Clipboard.....34
Sensor status.....34
Serial communications.....34
Status led.....34
Display contrast adjustment.....34

SECTION 9. LEVEL MONITOR GLOSSARY.....35

APPENDIX

APPENDIX A

SERIAL PROTOCOL AND WIRING CONNECTIONS ..... .37

APPENDIX B

INSTALLATION WIRING DRAWINGS 39

APPENDIX C

ENCLOSURE MOUNTING DIMENSIONS 43

APPENDIX D

DIAGNOSTICS GROUP - EACH SENSOR POSITION 52

APPENDIX E

SENSOR BEAM ANGLE CHART 54

APPENDIX F

DISPLAY MATRIX OF USER FUNCTIONS 55

APPENDIX G

CALIBRATION AND DIAGNOSITC NOTES 57

SECTION 1: UNPACKING & INSPECTION

1. Locate the packing slip shipped with your unit, this will list all the items sent with the shipment. Verify this against the order acknowledgment you received prior.
2. If all items correspond, note if the shipping containers are unusally dented and/or damaged, if not; begin unpacking the box or boxes. As each part is removed do a general examination of the part to check for any obvious physical damage.
3. If there is no apparent damage to the items you may begin the installation procedure in SECTION 3, although we recommended that you familiarize yourself with SECTION 2: *Application/Installation Considerations* prior to going to SECTION 3.
4. If any item shows damage due to shipment call the Customer Service Department immediately, at **(800) 778-9242** you will then be advised of the measures to take.
5. If you find items are missing from your shipment, contact the Bindicator Customer Service Department immediately, at **(800) 778-9242**. They will verify the order and trace any missing item for you.

SECTION 2: APPLICATION/INSTALLATION CONSIDERATIONS

This system is designed to be a continuous level measuring device, incorporating an ultrasonic transducer to measure the distance from the sensor to the material by the time elapsed method. In operation the electronics pulses the transducer which sends a pulse of ultrasonic sound from the transducer to the material, the time lapse from the pulse being transmitted to the return pulse being sensed is measured to determine distance. ***Therefore the placement of the transducer is critical to the correct operation of the system as a whole.***

The transducer's pulse spreads in a conical fashion as it travels away from the transducer. The beam spread is similar to that seen when holding a flashlight beam on a wall and walking closer to or further away from the wall (see Figure 2.1).

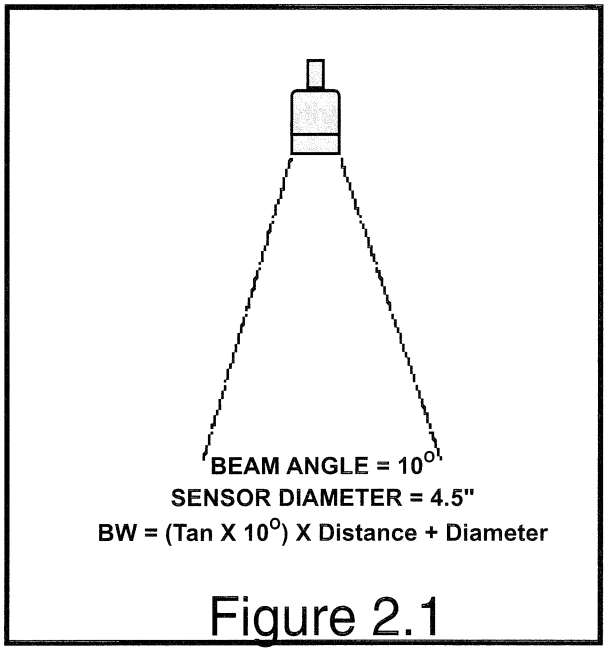

Figure 2.1

When installing the transducer in an application, this consideration must be evaluated. *Appendix E* contains a chart of beam angles for the various types of sensors offered. Use the chart to find the maximum span for your application. This will represent the maximum beam diameter at the span you are using. Or use the formula in Figure 2.2 to calculate the beam diameter.

Select a mounting location that places the sensor at least one third of the diameter in from the side of the vessel. Additionally, do not locate the sensor so that its beam may be interrupted by the curtain of falling material as the vessel is filled.

To calculate the beam width at any distance from the sensor use the formula BW = (Tan of 10º) X distance + sensor diameter. For example the beam width at 37 feet from the sensor would be: BW= (Tan of 10º) X 444 inches + 4.5 inches = 82.8 inches. This beam calculation would then mean the sensor should be mounted a minimum of 41.4 inches from the tank wall

Figure 2.2

NOTE:
If a dust collector is being used in the vessel, mount the sensor as far away from the dust collector as possible while maintaining the proper distances from the falling material and the side of the vessel. See Appendix E for examples of mounting configurations.

Mounting the sensor in a stand pipe is one of the most common reasons systems do not operate properly. The stand pipe itself can induce false echoes and noise in the signal if the stand pipe is not properly constructed. These problems can lead to intermittent problems and in some cases make the measurement impossible.

These problems have been studied extensively by Bindicator and a table has been provided to cover almost every possible configuration. Following these recommendations will greatly enhance the performance of your system. If the sensor is to be mounted in a stand pipe to elevate it above the vessel, refer to ***Appendix F*** for dimensions and mounting recommendations in a stand pipe.

The sensor comes standard with seven feet of RG-174 coaxial cable. The interconnect cable from the Sensor to the electronics should be RG-62 A/U coaxial cable(Belden #9268). The connection method between the end of the sensor coax and the length of RG-62 A/U (Belden #9268) should be either a water proofed solder connection or a terminal block connection that is terminated in a junction box, see Figures 2.3 and 2.4.

The coaxial cable should be run in a conduit to protect it from physical damage, as well as interference, from electrical noise. The two coax cables and their associated temperature compensation wires, from the same electronics can be run in the same conduit.

NOTE
THE CONDUIT SHOULD NOT CONTAIN OTHER A/C POWER LINES OR SIGNAL LINES.

To solder splice the coaxial connection simply strip both ends as shown. Next slide heat shrink tubing over the solid center conductor, and the outer insulation of the coax, prior to soldering. Solder the two center conductors together, let cool and then slide the heat shrink in place and heat to shrink. Next solder the braided shields together and let cool. Apply a small amount of an RTV type sealant to the junction of the solder joint and the previously soldered joint, slid the larger heat shrink over the splice and heat. A small amount of RTV should be pushed out both ends of the heat shrink tube, this will insure a good tight water seal.

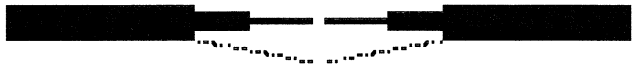

Figure 2.3

Figure 2.3 shows a typical junction box configuration for connecting the seven foot RG-174 pigtail to the interconnect cable (RG-62 A/U). It is advised that using the technique shown in Figure 2.4 that spade lugs be added to the RG-62 A/U after it has been prepared per Figure 3.1. Temperature compensation wire is a 2 conductor shielded - Belden # 9154.

When running the coaxial cable back to the electronics enclosure, only include coaxes and temperature compensation wires for that electronics. Coaxes from other sensors and or A/C power cables cannot be run in the same conduit.

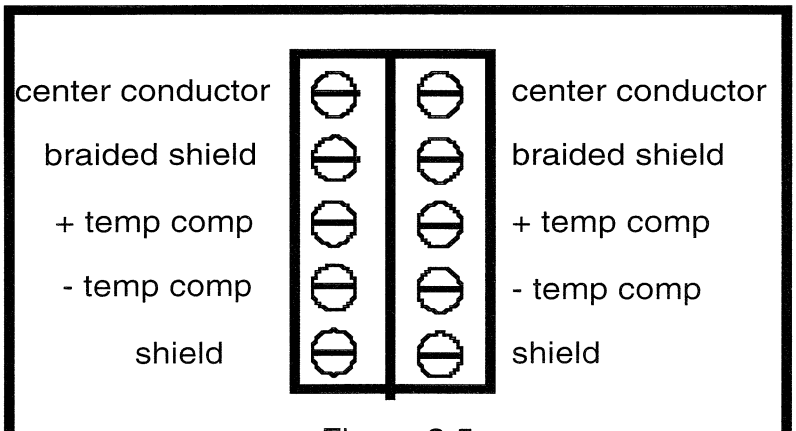

Figure 2.4 Figure 2.5

SECTION 3. INSTALLATION

MECHANICAL

The electronics are microprocessor based and use a micro very similar to the ones used in today's P.C.s. Care should be given in selecting a proper mounting location for the enclosure, as to its proximity to heat sources, water, cold or excessive vibration. Mount the enclosure in an area that is accessible and the display is easily visible from a distance. Also allow sufficient room for the enclosure door to be swung open for wiring connections. APPENDIX C contains dimensional drawings for the enclosure, drill the appropriate holes and mount the enclosure. All enclosure mounting hardware is to be customer supplied.

ELECTRICAL

The power requirements are the same as for a P.C., a filtered, stable power supply should be provided with proper surge protection. When wiring to the enclosure always use the conduit holes provided and bring the wiring in the bottom of the enclosure.

NEVER drill additional holes into the enclosure without consulting the factory. To do so will void your warranty. The enclosure is rated NEMA 4X. To maintain this rating the customer must provide proper conduit fittings and seals.

FIGURE 3.1

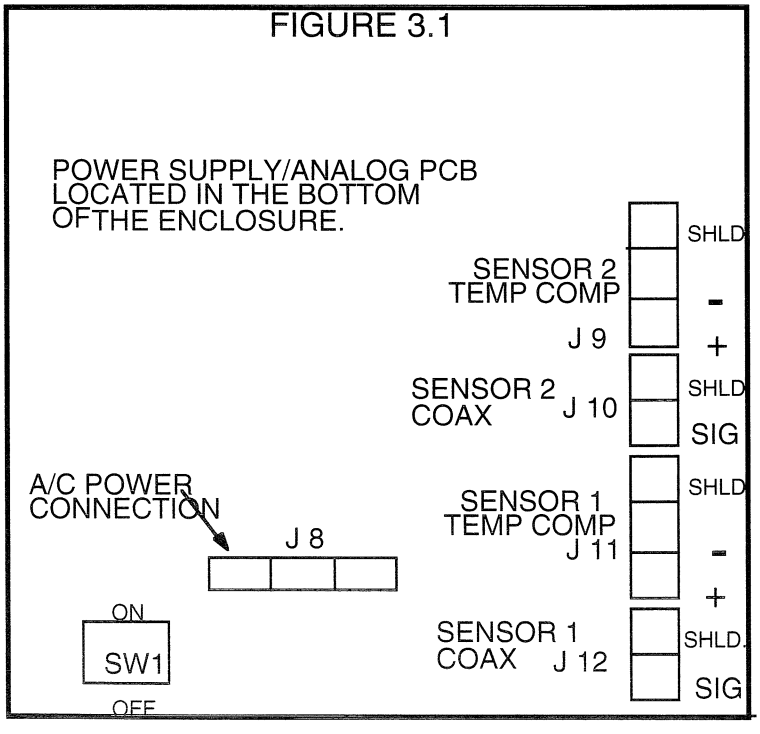

To wire the A/C power to the system refer to Figure 3-1.

1. Locate J8 on the power supply board (see Figure 3.1)
2. Use a minimum of 14 AWG wire, or to local code.
3. Insure that the ground on J8 is solidly connected to earth ground. To test this, use a DVM set on the lowest ohm scale and check for resistance from J8 ground to earth ground. This reading should be zero or very nearly zero ohms.
4. With the A/C power connected, locate J12 and pull the RG-62 coaxial cable through to the connector.
5. Strip the coax per Figure 3.2.
6. Wire Sensor one by connecting the solid center conductor to J12 signal (SIG) and the shield to J12 shield (SHLD).
7. If you are using two sensors wire Sensor #2 to J10, repeating the above steps.
8. Temperature compensation probes are wired to J11 (Sensor 1) and J9 (Sensor 2). Wire the black wire to minus (-), and the clear wire to Positive (+),the shield is wired to shield.

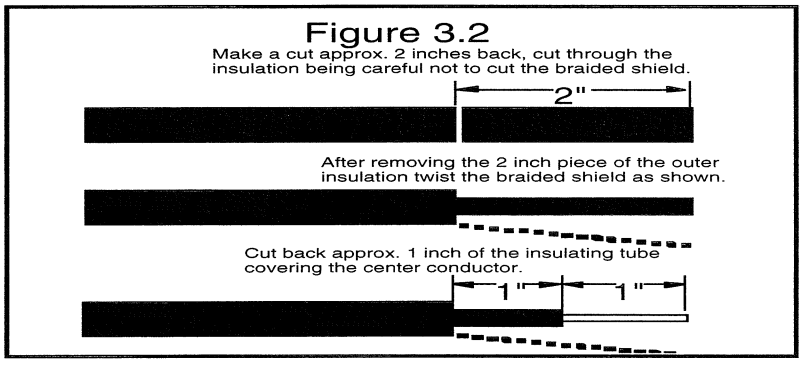

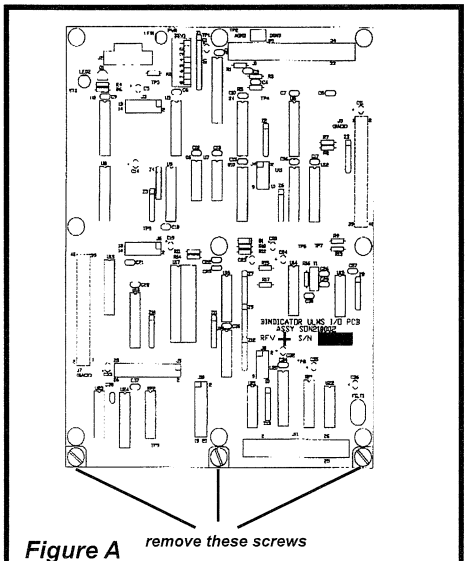

Figure A
Top view of circuit boards when the cover of the electronics unit is open.

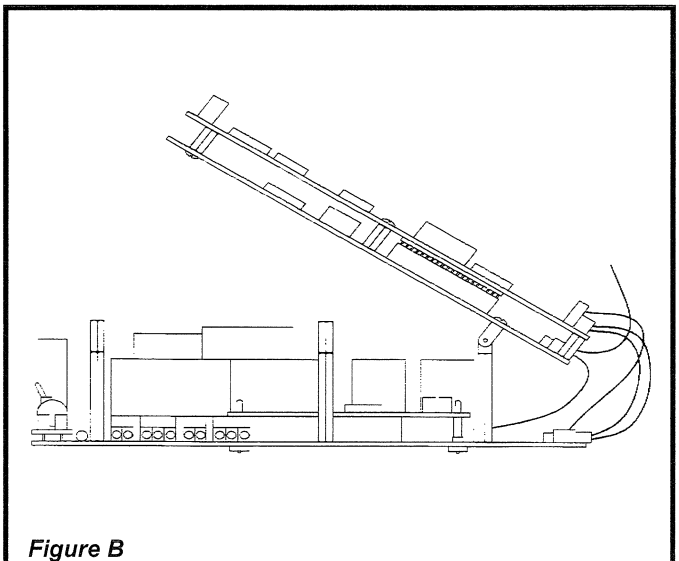

Figure B
Side view when the top layer of circuit boards are hinged up.

SYSTEM START UP

With the Sensor(s) installed and the electronics mounted and wired you are ready to start up the system. Turn on the power to the system via the toggle switch SW1 located in the lower left corner of the enclosure on the power supply board.

NOTE:

Before wiring any of the optional outputs go to SECTION 4.0 page 8 and perform "Quick Cal". This will eliminate any false alarms or set points, during the calibration process. Once the system is calibrated and operational go to SECTION 5.0 which will wxplain Wiring/Calibrating the outputs.

MOUNTING SENSORS

The Model 2001 Dual Point Level Monitor uses an Ultrasonic transducer to make its measurements. Ultrasonic transducers function by transmitting an echo pulse through the air above the material, the time of transit from the Sensor to the material and back again is translated into a level. By its nature an ultrasonic sensor is a line of sight device. This means it must have a clear path to travel to the material and back again.

The sensor mounting location is very important to the successful operation of the system. The sensor needs to be mounted so that the beam angle does not reflect off the walls of the vessel, is mounted too close to a ladder or other obstructions in the vessel. A location needs to meet these requirements, as well as, being far enough away from the fill port as to not see the curtain of falling material. If the vessel also contains a dust collector than the sensor must be mounted as far away from the dust collector as possible without infringing on the distance from the fill port. For assistance in choosing a sensor mounting point, call (810) 987-2700 and ask for an Applications Engineer.

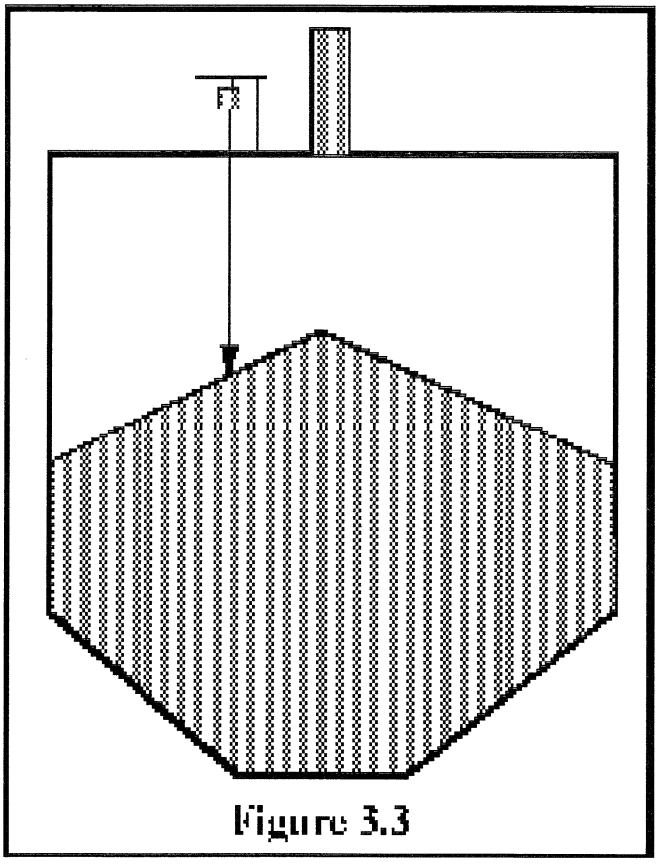

Figure 3.3

APPLICATION NOTE

Why is a dust collector a problem for ultrasonic measurement? The dust collector can cause very high levels of noise when operating. An ultrasonic device is looking for an echo pulse to return to the sensor for measurement, if the sensor is located too close to the dust collector, there are times when the noise overwhelms the echo and the echo is lost in the noise.

The Model 2001 has some of the most sophisticated Digital Signal Processing algorithms and filtering algorithms designed. However, you should do everything possible to reduce the signal to noise ratio whenever possible. Having the sensor mounting point away from the dust collector makes for a much improved signal to noise ratio and therefore, higher accuracy and greater repeatability.

SECTION 4. QUICK CALIBRATION

The Model 2001 comes with a unique feature called "**QUICK CAL**". Pressing the "**QUICK CAL**" key will initiate the "**QUICK CAL**"

The following is a sample calibration and the associated display readings, as they will be displayed on the LCD display. To accomplish "**QUICK CAL**" you need to have two measurement points. These are the distance to the material when the bin is full (**FULL DISTANCE**), as measured from the face of the Sensor, and the distance to the empty point (**EMPTY DISTANCE**).

KEY STROKE:	**DISPLAY**
QUICK CAL	**QUICK-CAL** **PRESS <ENTER>**
ENTER	**CHOOSE SENSOR #** **[(1) SENSOR 1]**

To switch between **SENSOR 1** and **SENSOR 2** press the select parameter group arrows as shown in Figure 4.1

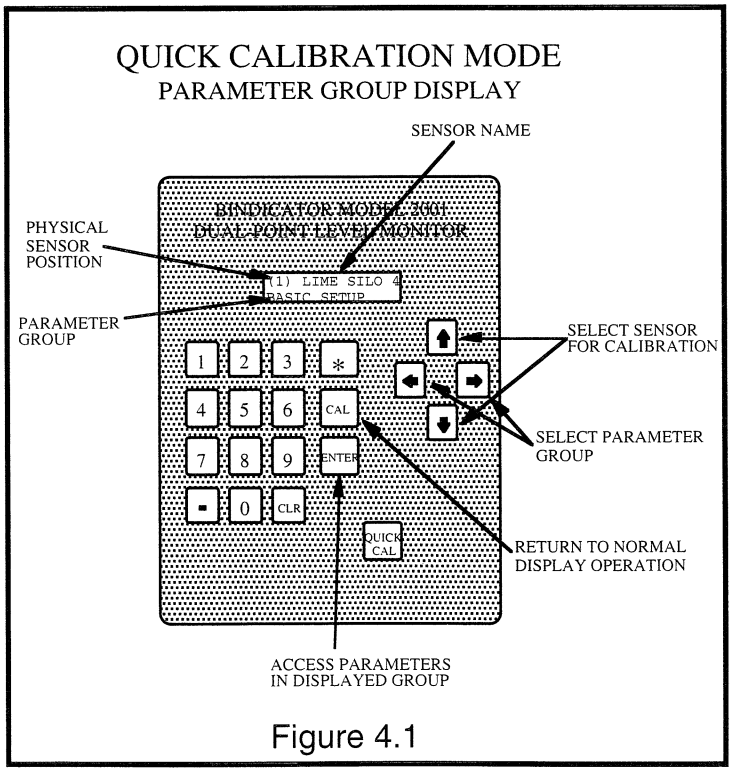

Figure 4.1

After selecting the appropriate **SENSOR** press:

ENTER	**FOUND MS-100** **PRESS <ENTER>**

The display shows that a **SENSOR** has been found and the type of **SENSOR**. The correct default values for the type of **SENSOR** found is automatically loaded.

ENTER	**FULL DISTANCE** **[_____] FEET**

Using the numeric keypad enter the value for the **FULL DISTANCE**. In this example we will use 5.0 feet, press 5, press the decimal point and press 0, the display will now read:

	FULL DISTANCE **[___5.0] FEET**
ENTER	**EMPTY DISTANCE** **[_____] FEET**

Repeat the process for the **FULL DISTANCE** and enter the **EMPTY DISTANCE**, for the example we will use 95.0, the display will read:

	EMPTY DISTANCE **[___95.0] FEET**
ENTER	**QUICKCAL #1 OK!** **PRESS <ENTER>**
ENTER	**(1) SENSOR 1** **XX.X FEET**

The system is now calibrated and reading in MATERIAL MODE.

Normal operation of the system is to read out in the amount of material in the bin. To change the mode to AIRSPACE **MODE**, press the **CAL** key this will allow you to access the **BASIC SET-UP GROUP**, scroll to **MEAS MODE** and press **ENTER**. This will access the mode and allow you to scroll to MATERIAL MODE, press enter, next scroll to AIRSPACE MODE, press enter, the system will switch to the new mode. Pressing the CAL key twice will return you to normal measurement readings. And the display will now show a reading that is representative of the distance to the material in the vessel.

SECTION 5. CALIBRATIING THE OUTPUTS

Once "**QUICK CAL**" has been performed per SECTION 4, there are other Functions that may be programmed depending upon your application and the optional outputs offered on the Model 2001.

Following is a description of each function, an example of how the display will appear during the programming sequence and an explanation of how to scroll through the Function menus and/or sub menus. See Figures 5.1 and 5.2. The display toggles between Sensor 1 and Sensor 2, the Sensor shown on the display when "CAL" is pressed will be the Sensor calibrated.

For example: When attempting to calibrate Sensor 2 wait until Sensor 2 is shown and then press the "CAL" key.

NORMAL DISPLAY OPERATION

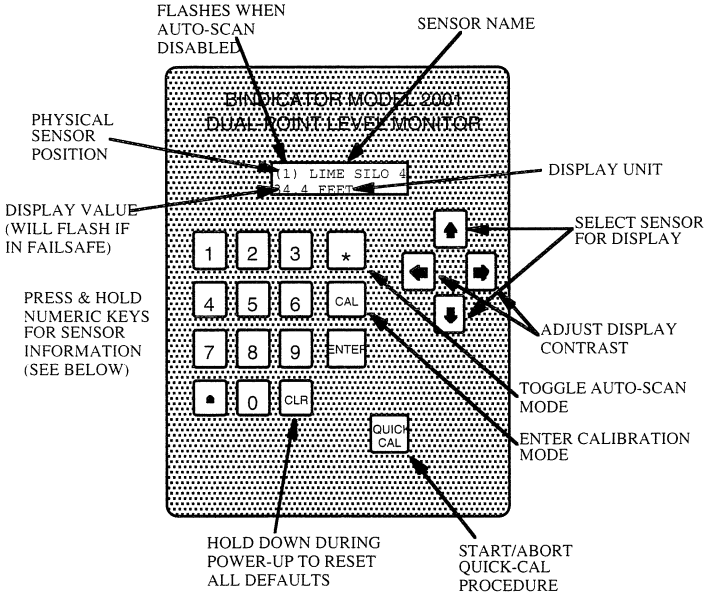

SENSOR INFORMATION:
1 TO 6 - SENSOR DIAGNOSTICS
7 - SENSOR TEMPERATURE
0 - ACTUAL DISTANCE
. - SENSOR STATUS

Figure 5.1

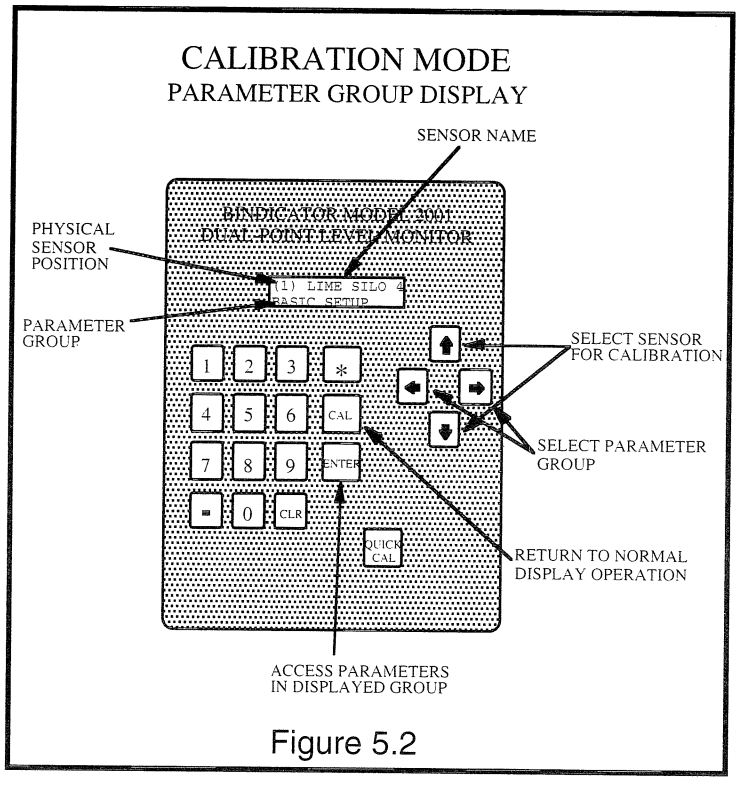

Figure 5.2

Pressing the **CAL** button will access the calibration mode. (We will skip over some Function groups here that will be explained in further detail in later Sections. Here we want to focus strictly on Calibration related groups.) Upon pressing the **CAL** button the display will read:

KEY STROKE	**DISPLAY**
CAL	**(1) SENSOR** **BASIC SETUP**
ENTER	**SENSOR TYPE** **MS-100**

This is automatically set when the system starts up. You will not need to change this unless you changed the Sensor type without powering down the electronics, and that is not recommended. Press the right arrow again and the display will read:

➡	**DISTANCE UNIT** **FEET**

If you want to change to another unit other than **FEET**, press **ENTER**:

ENTER	**DISTANCE UNIT [FEET]**
➡	**DISTANCE UNIT [INCHES]**
➡	**DISTANCE UNIT [METERS]**
➡	**DISTANCE UNIT [CM]**

In all cases when in a menu group, pressing the right or left arrow will move you forward or backwards within the group. When you find the desired unit press **ENTER**. The brackets, ([ ]) will disappear, signifying the system has accepted the change. Pressing the **CAL** button twice will return the system to normal operation and begin reading out level information again. The display will show the new units that were selected.

The new units will also be used in calculating the **FULL DISTANCE** and the **EMPTY DISTANCE**, using our previous example you will see **5.0 feet** change to **1.2 METERS**.

The selection of groups and menus is common to all groups Pressing the **CAL** button accesses the calibration groups. You scroll to the appropriate group using the right and left arrow keys. To enter a group you press **ENTER**, and again to select within the group you use the right and left arrow keys.

Once the correct selection is input, pressing the **ENTER** key again stores the new value in memory. The indication that this has been accomplished is when the ([ ]) brackets disappear. To return directly to the operation mode press the **CAL** key twice. To return to the calibration group to select another group for calibration, press the CAL button once and then scroll to the next group.

SETTING THE 4/20 MA OUTPUT(S).

Scroll to the group **4-20 OUTPUT #X**, the display reads:

GLOBAL CAL GROUP
4-20 OUTPUT #1

#1 represents Sensor 1. For this example that is our standard Sensor. If you were calibrating Sensor #2, it would say **Sensor 2**
When you press **ENTER**, the display will read:

GLOBAL CAL GROUP
4-20 OUTPUT #1

ENTER **ASSIGNED SENSOR**
(1) SENSOR 1

To choose the Sensor to calibrate, press **ENTER** and select Sensor 1 or 2. For this example we will leave it at Sensor 1.

OUTPUT RANGE

4 mA TO 20 mA

This option allows the current output to be inverted to 20 mA to 4 mA. It is defaulted to normal operation or 4 mA to 20 mA.

OUTPUT MODE

[FULL/EMPTY PTS]

The default setting is to set 4 mA equals the **EMPTY POINT** and the 20 mA is set to the **FULL POINT**. Using our example this means the 4 mA is set at **95.0 feet** and the 20 mA is set at **5.0 feet**. An option is available to select [CUSTOM DIST.], this allows you to set the 4 mA and 20 mA points at some other point on the measurement span than the FULL and EMPTY points.

20 mA DISTANCE

5.0 FEET

This shows the present setting of the 20 mA point. We have the example set to **OUTPUT MODE = FULL/EMPTY PTS**, so the 20 mA point has been automatically set to the full point we set during "**QUICK CAL**".

4 mA DISTANCE

95.00 FEET

This shows the present setting of the 20 mA point. We have the example set to **OUTPUT MODE = FULL/EMPTY PTS**, so the 4 mA point has been automatically set to the **EMPTY POINT** we set during "**QUICK CAL**".

FAILSAFE MODE

HOLD LAST VALUE

The system defaults to **HOLD LST VALUE**. The options are:

[FORCE TO 4 mA]

[FORCE TO 20 mA]

Select the appropriate mode by pressing **ENTER** and scrolling using the arrow key to appropriate selection and pressing **ENTER**.

These selections allow you to have control even in an echo lost situation. Should the system lose the echo for whatever reason the device that is being controlled via the 4 to 20 can be flagged that a problem exists.

The selections allow you to pick the logic required for your application. The output can be driven high (20 mA) or driven low (4 mA), or in cases where the signal is merely being logged it may be desirable to hold the last value.

CALIBRATING THE RELAY OUTPUTS:

To calibrate the relays, scroll to the **GLOBAL CAL GROUP RELAY OUTPUT #1**, group. Press **ENTER**:

ASSIGNED SENSOR
(1) SENSOR 1

At this point select the sensor to which you wish to assign the relay by pressing **ENTER** and scroll to the correct choice. To select a relay press the up or down arrows to select. Once your selection is made, press:

OPERATING MODE

FAILSAFE

To access press **ENTER**, to change within the menu scroll. Your selections are [**DISTANCE**], [**OFF**] or [**FAILSAFE**]. Make your selection and press **ENTER**. Press:

To scroll through the selections. **OFF** turns the relay off, **DISTANCE** sets the relay to alarm anytime the distance set here is reached. These values are then set in the **ON DISTANCE** and the **OFF DISTANCE** functions. **FAILSAFE** uses the relay as an indicator that an **ECHO LOST** condition has occurred. Program your selection by pressing **ENTER**. Next press:

The display will now read;

ON DISTANCE
00.0 FEET

Press **ENTER**, the display will show **[00.0] FEET**. You can now use the numeric keypad to enter your set-point level. This measurement is made from the face of the Sensor. If you require a set-point or activate when there is ten feet of material left in the bin, calculate this value and enter it here. In our example (95.0 feet minus 10 feet), we would set the relay to energize at 85.0 feet, as measured from the face of the sensor. Press **ENTER**, then **PRESS**:

OFF DISTANCE

00.0 FEET

The **OFF DISTANCE** allows you to set a **DEAD BAND** for the set-point. The **DEAD BAND** is used to eliminate relay chatter, when a level may fluctuate above and below a set-point level. This fluctuation causes the relay to energize and then de-energize. This situation can cause false alarms and cause controlled devices to cycle on and off needlessly.

The **OFF DISTANCE** can be set above or below a set-point level. This depends upon the logic of the relay. If the set-point is for a low level alarm you should set the **OFF DISTANCE** to above the set-point value. If the set-point is for a high level alarm you should set the **OFF DISTANCE** to below the set-point value.

To set the value press **ENTER**, the display will show:

OFF DISTANCE
[ ] FEET/M

Set the value using the numeric keypad and press **ENTER**. To return to normal display reading level, press the **CAL** key twice. To access another **CAL** group, press the **CAL** key once and then press:

Repeat this process for all other relays to be programmed.

All **CAL** groups not covered in this section are explained in SECTION 6.0 and SECTION 7.0. Refer to the table of contents.

EXAMPLES OF RELAY SETTINGS:

All relay settings are based on the distance from the face of the sensor (airspace), keep this in mind when determining what distance to set a relay for your application. As an example let's take a vessel that has a span of 55 feet, the full point is at 5 feet, therefore the total distance to the empty point is 55 + 5 = 60 feet, (remember always measure from the sensor).

First we will look at a high level set point. We want an alarm at 90%, ninety percent of 55 feet is 49.5 feet of material, if we subtract 49.5 feet from the total span of 60 feet we get 10.5 feet. That is the distance from the sensor at which we want the relay to alarm. Using the procedure on page 20 you would set the ON DISTANCE to10.5 feet. Now because this is a High level alarm you want the alarm to stay activated at or above the ninety percent point the OFF DISTANCE will be set farther away from the sensor, or below the 90 percent point. In this example let's use three feet as the dead band. You would then set the OFF DISTANCE to 13.5 feet. In this example the alarm will energize when the material goes above 49.5 feet and stays on until the level goes below 46.5 feet.

Next we will look at a Low level set point. We want an alarm at 10%, ten percent of 55 feet is 5.5 feet of material, if we subtract 5.5 feet from the total span of 60 feet we get 54.5 feet. That is the distance from the sensor at which we want the relay to alarm. Using the procedure on page 20 you would set the ON DISTANCE to 54.5 feet. Now because this is a Low level alarm you want the alarm to stay activated at or below the ten percent point the OFF DISTANCE will be set closer to the sensor, or above the 10 percent point. In this example let's use three feet as the dead band. You would then set the OFF DISTANCE to 8.5 feet. In this example the alarm will energize when the material goes below 5.5 feet and stays on until the level goes above 8.5 feet.

SECTION 6. SPECIAL DISPLAY FUNCTIONS

This section covers the set up of the display to read out in units other than standard distance units, such as volume. It also covers the input of a specific unit name as well as changing the reference from Sensor 1 or Sensor 2, for example we may want the display to read **FLOUR-BIN1**, you have up to ten digits to enter the name chosen for the measurement point.

Press the **CAL** key to access the calibration mode. Scroll to the **DISPLAY GROUP** using the

(1) SENSOR 1

DISPLAY

PRESS ENTER

DISPLAY UNIT
DISTANCE UNITS

PRESS ENTER

DISPLAY UNIT
[DISTANCE UNITS]

You have now accessed the display units. To change the unit the system uses to sense the measured distance, scroll to the unit you will be using and press **ENTER**. This change affects the name of the unit displayed on the second line of the display. The defaults show the readings in feet, to change this to percent simply select percent and press **ENTER**. Pressing the **CAL** key twice will prompt the display to read in level again. The display will now read **xx.x percent**. An example display reading may read:

(1) SENSOR 1
68.7 PERCENT

DISPLAY UNIT

[PERCENT SPAN]

DISPLAY UNIT

[USER UNIT]

User units allow you to enter a unit name that best suits your application. This might be gallons, liters, pounds etc. To change the units, press **ENTER**, the system will now change to the user unit you name. Press the right arrow key to scroll, the display will now read:

USER UNIT NAME
[_]

You may use up to seven (7) digits for a name. To enter a name use the up and down arrow keys to change to the character you wish to display. The cursor (_) will be flashing at the bottom of the left most digit. Scroll up or down to the appropriate character. When the appropriate character is displayed, press the right arrow key to move to the next digit.

Repeat this process until the name is displayed. Press **ENTER**, the ([]) brackets will disappear, signifying the name has been accepted. Scroll to **FULL SCALE VALUE**, using the right arrow key. Press **ENTER**, using the numeric key pad enter the value that represents "full" in your designated units. As an example, entered **36,000**, designating that the vessel holds a total of 36,000 liters. Press the **CAL** key twice and the display will read:

(1) SENSOR 1
36000 LITERS

DISPLAY UNIT

[ACTUAL DISTANCE]

Selecting **ACTUAL DISTANCE** will cause the displayed value to represent the actual distance to the material level. The units will be whatever was selected under **BASIC SETUP, DISTANCE UNIT.**

USER UNIT NAME

As explained above this function allows you to specifically designate the unit name.

FULL SCALE VALUE

This function allows you to scale the output of the display over a measurement span other than distance. If the vessels contents are linear in relationship to the level then entering the maximum value here is all that is required; as was shown in the example above for 36,000 liters. However if the vessel is non-linear, then read the portion of Section 7.0 that covers **VOLUME.**

DISPLAY FORMAT

AUTOMATIC

This function allow you to set the display format. If you are using a custom distance unit or reading out in a volume unit, you will want to select the appropriate display format. The potential options are listed here:

ASSIGNED OUTPUTS

PRESS <ENTER>

press **ENTER**:

The display will now show which outputs have been assigned to the Sensor you are calibrating, either Sensor 1 or Sensor 2. Use the

to scroll through the list of **ASSIGNED OUTPUTS.** Press the

This function group will show you if a 4/20 mA output is assigned to the Sensor and its output signal at that time. Any relays assigned to the Sensor will be shown and their status will be shown, (on or off).

Press the CAL key twice to return to normal operating mode.

SECTION 7. TROUBLESHOOTING AND DIAGNOSTICS

If a problem shows up with operation of the system or the display is flashing "echo lost" many times, evaluating the **DIAGNOSTICS** can point to the problem. Following is a brief description of each of the diagnostic factors and the appropriate action to be taken for each.

ACTUAL DISTANCE

ACTUAL DISTANCE

00.0 FEET

This diagnostic ignores the numbers programmed for level or volume readout and gives you the distance to the target it sees as the material. Use this function anytime the system gives a reading that is steady and repeatable, but is not correct.

Normally you will find that in these situations the sensor is seeing an obstruction, side wall build up or a beam in the vessel. Moving the sensor so it misses the obstruction will cure the problem. See APPENDIX E on beam angles and beam diameters for mounting suggestions.

TEMPERATURE

TEMPERATURE

20 C (68 F)

If the system is showing a very erratic reading or is stuck on **full** or **empty**, check this function. If the temperature reading is normal and what you would expect it to be, then this diagnostic is OK. However if the temperature ranges drifts, or it shows an abnormally high reading or a abnormally low reading, disconnect the temp probe from the electronics. If the symptoms disappear, replace the temp probe. Using and OHM meter, the probe reading between black and white should be approximately 12.5 meg OHMS at ambient.

SENSOR FIRING FREQUENCY

TX FREQUENCY

20

This number represents the frequency the Sensor is being fired at. Following is a list of sensors and their appropriate frequency numbers:

MS-100	**20**
MS-60	**20**
MS-30	**9**
MS-25	**6**

If the frequency number does not match the sensor attached to that measurement point, use the **RESET DEFAULTS** function in the **BASIC SETUP** group. This will eliminate the previous calibration so you must perform "**QUICK CAL**" again after you have reset defaults. Take a minute to write down your calibration prior to resetting defaults.

Note: In all cases, write down the diagnostic number on "APPENDIX H" and call the factory service department (810) 987-2700, to discuss the readings.

SENSOR AMPLITUDE

TX AMPLITUDE

400

This function is the actual power level that the Sensor is being fired at. The range for this function is from **0 to 1000**. If the **TX AMPLITUDE** is at or near maximum (1000) and the system is in echo lost, then this indicates a Sensor problem or a Sensor wiring problem.

Check that the wiring at the junction box and at the electronics is connected properly. Make sure the **RED** wire from the Sensor coax is wired to the coax center conductor and the **BLACK** wire from the Sensor coax is wired to the coax shield. Verify this at the electronics as well.

If the system has been operational for some period of time it is possible that water has entered the junction box and the signal is being shorted out. This would also show up on **RX THRESHOLD**, if this function is showing a high reading. This indicates a high signal to noise ratio which would be consistent with a shorted sensor. Check the junction box for water.

If the junction box shows up dry, then disconnect the coax at the sensor and the electronics, check both the center conductor and the shield to ground for a short somewhere in the cable run back to the electronics. Check the center conductor of the coax to the shield to check for shorts. If any of these show up replace the coax.

To check the Sensor itself read across the **RED** and **BLACK** wires. Following is a list of the correct resistance for each Sensor, +/- 5 %.

MS-100	**75 K ohms**
MS-60	**120 K ohms**
MS-30	**200 K ohms**
MS-25	**301 K ohms**

Each Sensor has a termination resistor to drain any residual power to ground. This is done to meet CSA and FM explosion proof approvals. It also gives us a way to reference the frequency of the Sensor by using selected 1% precision values. Listed above is the correct resistance value for the appropriate frequency Sensor.

CYCLES IN BURST

TX CYCLES

22

This function represents the actual number of cycles in the transmit burst. The correct number of cycles is listed below by Sensor type. If this number is not correct enter the correct value.

MS-100	**22**
MS-60	**22**
MS-30	**15**
MS-25	**8**

RECEIVER GAIN

RECEIVER GAIN

15

This function shows a number relative to the level to which the receiver gain is turned on. The range for this Function is 0 to 1000, where 1000 is maximum. A very high number in this Function in conjunction with the **TRANSMIT AMPLITUDE** and or TVG being very high and or at maximum, shows the system is having a very difficult time seeing an echo. If the display is also flashing **ECHO LOST**, then suspect a Sensor problem and check per the example given under *Transmit Amplitude*.

TIME VARIABLE GAIN

RECEIVER TVG

0

This Function represents the Time Variable Gain. **TVG** is used to assist the receiver in seeing an echo in difficult applications. Its range is 0 to 1000. The only time this Function will be at maximum (1000) is after the **TRANSMIT AMPLITUDE** has gone to full power and an echo is still not located. If this Function is at maximum, recheck, using the check list in *Transmit Amplitude*. If this problem persists, please call the factory.

SIGNAL-TO-NOISE RATIO

RX THRESHOLD

25

The **RX THRESHOLD** is a representation of the signal to noise ratio as seen at the receiver. The range for this Function is 0 to 255, where 255 is maximum. There are two sources of noise as seen at the receiver.

- The first is ambient noise form the application itself, this level reaches its peak during a fill cycle. In only very rare circumstances can ambient noise cause problems. The most often seen case when ambient noise causes erratic readings is when the Sensor has been mounted too close to a dust collector. See APPENDIX E for mounting recommendations.

- The second case of high threshold noise is from electrical noise. In either case, this reading can point to problems that can cause **ECHO LOST**, or erratic readings. These problems are generally easy to find, follow the check list be low:

1. Is the coax run in a dedicated conduit? If other signal wires, control lines and or A/C power lines are in the conduit, remove them or place the coax in its own conduit.
2. Check the coax for ground faults as explained in TX AMPLITUDE. Also check the junction box for water and or corrosion.
3. Check the temp comp wiring as per temperature on page 25.
4. Check the Sensor and the temp comp for proper resistance's, as per the tables.

SECTION 8.0 LEVEL MONITOR PARAMETERS/FUNCTIONS

BASIC SETUP GROUP - EACH SENSOR POSITION

SENSOR TYPE (CHOICE)

Indicates which Sensor is connected to a physical Sensor position. If "OFF", then no Sensor is connected.

DISTANCE UNIT (CHOICE)

The measurement unit that will be used for *all* distance values associated with that particular Sensor.

FULL DISTANCE (NUMERIC ENTRY)

The distance from the Sensor face to the point where the vessel is considered to be full (for the purposes of the level measurement system). This distance can not be smaller than the blind space for the sensor being used.

EMPTY DISTANCE (NUMERIC ENTRY)

The distance from the Sensor face to the point where the vessel is considered to be empty (for the purposes of the level measurement system).

SPAN (NUMERIC ENTRY)

The distance between the FULL DISTANCE and EMPTY DISTANCE points. Represents the full measurement span for the Sensor. (Empty Distance - Full Distance)

MEASUREMENT MODE (CHOICE)

Determines whether the system will indicate airspace (based on dis tance from the FULL POINT to the material surface), or material level (based on distance from EMPTY point to material surface).

SENSOR NAME (ALPHANUMERIC ENTRY)

A user-entered alphanumeric label for a given Sensor position. The sensor name can have a maximum of 10 characters.

RESET DEFAULTS (FUNCTION)

Allows user to reset current Sensor position to factory defaults.

DISPLAY GROUP - EACH SENSOR POSITION

DISPLAY UNIT (CHOICE)

Determines whether the display will be in distance units, percent, user units, or absolute distance from Sensor.

USER UNIT NAME (ALPHANUMERIC ENTRY)

A user-entered alphanumeric representation for the units to be dis played.

FULL SCALE VALUE (NUMERIC ENTRY)

The value to be displayed when the vessel is full, in USER UNITS.

DISPLAY FORMAT (CHOICE)

Determines how many significant digits are to be displayed. The AUTOMATIC choice makes the determination automatically based on the value of the number to be displayed. Affects all displayed values during normal display operation (but not parameter entry, where AU TOMATIC is always in effect).

ASSIGNED OUTPUTS (FUNCTION)

Allows user to see which 4-20 mA and relay outputs are assigned to the current Sensor. Also shows current value or state of each output.

SIGNAL PROCESSING GROUP - EACH SENSOR POSITION

NEAR BLANKING (NUMERIC ENTRY)

Sets the distance from the Sensor face inside of which all echo signal information is ignored. The value displayed is the default value for the Sensor assigned. Never set this value to a number smaller than the full distance.

FAR BLANKING (NUMERIC ENTRY)

Sets the distance from the Sensor face outside of which all echo signal information is ignored

SIGNAL AVERAGING (NUMERIC ENTRY)

Determines how many echo samples are averaged to produce the measured distance.

FAIL-SAFE TIMER (NUMERIC ENTRY)

Sets the period of time between loss of echo signal and activation of fail-safe indicators.

UNIVERSAL GROUP - GLOBAL

The parameters in this group apply to system operation in general rather than a particular Sensor position.

ACCESS CODE (NUMERIC ENTRY)

User-entered code that determines the user's access level, which in turn determines which parameters are available for display and modification.

DISPLAY SCAN RATE (NUMERIC ENTRY)

Determines how many seconds the display will show each Sensor position while auto scan mode is enabled.

POWER-ON TIME (NOT USER-CHANGEABLE)

The amount of time, in minutes, that has elapsed since the last power-up or reset of the system.

4-20 OUTPUT GROUP - OUTPUT

The parameters in this group apply to the operation of specific outputs rather than a particular Sensor position.

ASSIGNED SENSOR (CHOICE)

Assigns the output to a particular Sensor position.

OUTPUT RANGE (CHOICE)

Determines whether the output will be 4-20 mA or 0-20 mA.

OUTPUT MODE (CHOICE)

Determines whether the output will be scaled to the FULL and EMPTY points, or will use custom-entered distance points.

20 MA DISTANCE (NUMERIC ENTRY)

Sets the distance from the Sensor face at which the output will be 20 mA.

4 MA DISTANCE (NUMERIC ENTRY)

Sets the distance from the Sensor face at which the output will be 4 mA (or 0 mA, depending on OUTPUT RANGE setting).

FAIL-SAFE MODE (CHOICE)

Determines how the output will respond to a fail-safe condition.

CURRENT VALUE (NOT USER-CHANGEABLE)

Current output value in mA.

RELAY OUTPUT GROUP - OUTPUT

The parameters in this group apply to the operation of specific outputs rather than a particular Sensor position.

ASSIGNED SENSOR (CHOICE)

Assigns the output to a particular Sensor position.

OPERATING MODE (CHOICE)

Determines whether the output will be off, change state based on distance, or change state based on fail-safe status.

ON DISTANCE (NUMERIC ENTRY)

Sets the distance from the Sensor face at which the relay will be energized.

OFF DISTANCE (NUMERIC ENTRY)

Sets the distance from the Sensor face at which the relay will be de-energized.

FAIL-SAFE MODE (CHOICE)

Determines how the output will respond to a fail-safe condition.

CURRENT STATE (NOT USER-CHANGEABLE)

Current relay state (on or off)

GENERAL OPERATION

The software system is designed such that the level measurement process is always going on in the background, regardless of what the user is doing on the keypad/display. This process is only affected when the user makes a change to a parameter that directly controls Sensor operation.

DISPLAY MODES

The display mode of the system determines what is shown on the display, and how the user's key presses are processed. The display and active keys for each mode, as well as the menu structure, are described in the attached diagrams.

ACCESS LEVEL

The access code functionality has been broadened to allow for four levels of access to the system. Each successive access level allows all rights in lower levels.

Access Level 1: Observe user parameters, no changes allowed. Access code is 0000.

Access Level 2: Allow changes to user parameters. Access code is 2001.

Access Level 3: Observe all parameters,view diagnostics. Access code is 1002.

Access Level 4: Access diagnostic parameters. Access Consult factory.

The access codes are set to easy-to-remember values. These codes are set to eliminate accidental changes to calibration or un-authorized changes.

For a given access level, only those parameters that are allowed for observation at that access level will be displayed. For example, with the system set to access level 2, the factory diagnostic parameters will not appear in the diagnostics menu group or when numeric keys are pressed during normal operation.

When an attempt is made to modify a parameter, the system will check to see if the current access level allows changes to that particular parameter. If so, changes can will be allowed. If not, then one of two things will happen. If the parameter is a normal user parameter, the user is prompted to enter an access code to allow changes. If it is a factory diagnostic parameter, then the system acts as though the parameter is simply not changeable (i.e. it doesn't allow changes, and doesn't prompt for an access code).

RESETTING DEFAULTS

To reset *all* parameters, including global and output parameters, hold the <**CLR**> key down during power-up.

To reset defaults for a specific Sensor position, access the **RESET DEFAULTS** option in the **BASIC SETUP** menu group. When this option is accessed, pressing <**ENTER**> will reset defaults for the currently selected Sensor position

Resetting all defaults at power-up can be done at any access level, and the procedure resets access to level 2. Access level 2 is required before Sensor defaults can be reset.

CLIPBOARD

When Sensor defaults are reset, the system stores the previous settings in the "clipboard". These settings can be viewed by pressing the '*' key when displaying a parameter. Only user-changeable Sensor parameters are saved in the clipboard. The clipboard only holds the previous values of the last Sensor whose defaults were reset. The previous settings are lost when the system is reset or powered down, or another Sensor is reset to defaults.

SENSOR STATUS

A problem with a given Sensor position is indicated by the flashing of the displayed value for that Sensor when in normal display operation. Pressing the '.' key provides an indication of the status of the current Sensor.

SERIAL COMMUNICATIONS

The primary serial port can be accessed for level information in a primitive manner. Sending a '0' (zero) or '1' character will cause the unit to respond with a data string containing the absolute target distance in inches for Sensor position 1 or 2, respectively. Serial port settings are 9600 baud, 8 data bits, 1 stop bit, no parity.

STATUS LED

The I/O board has a green LED (LED2) to indicate microprocessor status. This LED is driven via software, and will flash at a steady rate during normal operation of the system. If the microprocessor stops running for any reason, or the software crashes, the LED will stop flashing

DISPLAY CONTRAST ADJUSTMENT

The CPU board has a digital potentiometer that can adjust the LCD display contrast under software control. The right and left arrow keys can be used to adjust display contrast when the system is displaying level information (i.e. not in a calibration mode, where the arrow keys are used for other things).

SECTION 9.0 LEVEL MONITOR GLOSSARY

ACTIVE SENSOR

Any Sensor position that has a Sensor connected to it, and the SENSOR TYPE parameter is not set to OFF.

AUTO SCAN MODE

Determines how the display acts during normal display operation. When enabled, auto scan mode causes the display to cycle between active sensors. When disabled, the display will remain on the current display Sensor. Auto scan mode has no effect on the level measurement process or the updating of analog and relay outputs.

CALIBRATION MODE

When the CAL key is pressed during normal operation, the unit will enter calibration mode. In this mode, system operating parameters can be examined and changed. *The display operating mode has no effect on the level measurement process.*

CURRENT DISPLAY SENSOR

The Sensor position currently selected for display or parameter entry. The current Sensor can be changed using the UP and DOWN keys. When in normal display operation, only active sensors can be selected. When in calibration mode, any Sensor position can be selected.

CURRENT MEASUREMENT SENSOR

The Sensor position currently selected for level measurement. This Sensor is being fired by the transmitter and the echo signal processed by the receiver. *Selection of the current measurement Sensor is a background operation, and is not affected by display/keypad operations.*

GLOBAL PARAMETER*

A single operating parameter that affects the overall operation of the system, rather than a particular Sensor position.

NORMAL DISPLAY OPERATION

The normal display mode where level information is displayed for the current display Sensor. If auto scan is enabled, the current display Sensor will cycle between all active sensors. *The display operating mode has no effect on the level measurement process.*

OUTPUT PARAMETER

A single operating parameter that affects the operation of a particular analog or relay output, rather than a particular Sensor position.

PHYSICAL SENSOR POSITION

A sensor position with its associated connection points and hardware, numbered from one through the total number of available Sensor positions.

APPENDIX A

SERIAL PROTOCOL

AND

WIRING CONNECTIONS

SON2E0011 Relay and 4/2-mA Module Wiring

	REVISIONS	DATE	CK'D	APP'D
A	MS-2000 SERIES WAS MICROSONIC PER ECO #96-085 CR	10/4 96		

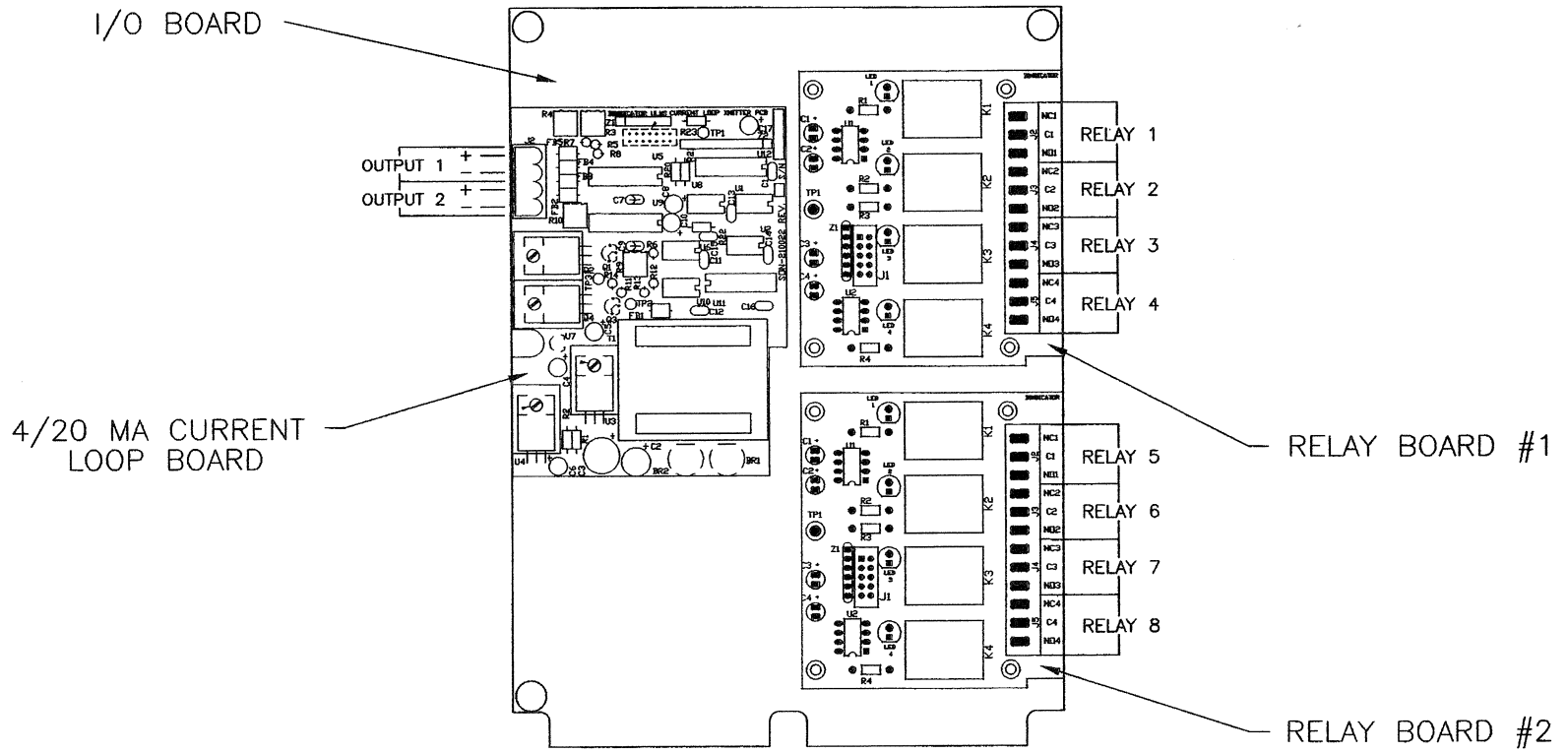

NOTES:

1. CURRENT LOOP WIRING TO BE MINIMUM #18 AWG SHIELD TWISTED PAIR.
2. RELAY WIRING TO BE PER LOCAL STANDARDS. RELAY CONTACT RATING: 10A, 250 VAC.

DO NOT SCALE DIM'S. ARE IN INCHES

DET.	REQD	SHT	DESCRIPTION	MAT. OR PART

MATERIAL	FINISH	UNSPECIFIED TOL. DECIMAL.XXX ±= XXX ±= ANGLES ± 1/2° DEBURR & BREAK EDGES .005	DRAWN	CHECKED	APPROVED	PROD.	MARKET.
			RUSSELL	JS	BL	WJR	CC
			DATE 10/10/95	DATE 10/10/95	DATE 10/10/95	DATE 10/11/95	DATE 10/10/95

BINDICATOR® PORT HURON,MICHIGAN 48060	TITLE	SCALE	SIZE	PART OR DRAWING
	HOOK-UP, MS-2000 SERIES RELAY AND 4/20 MA BOARDS	NONE	B	SON2E0011

APPENDIX B

INSTALLATION WIRING

DRAWINGS

SON2E0001 Power Input and Sensor Wiring

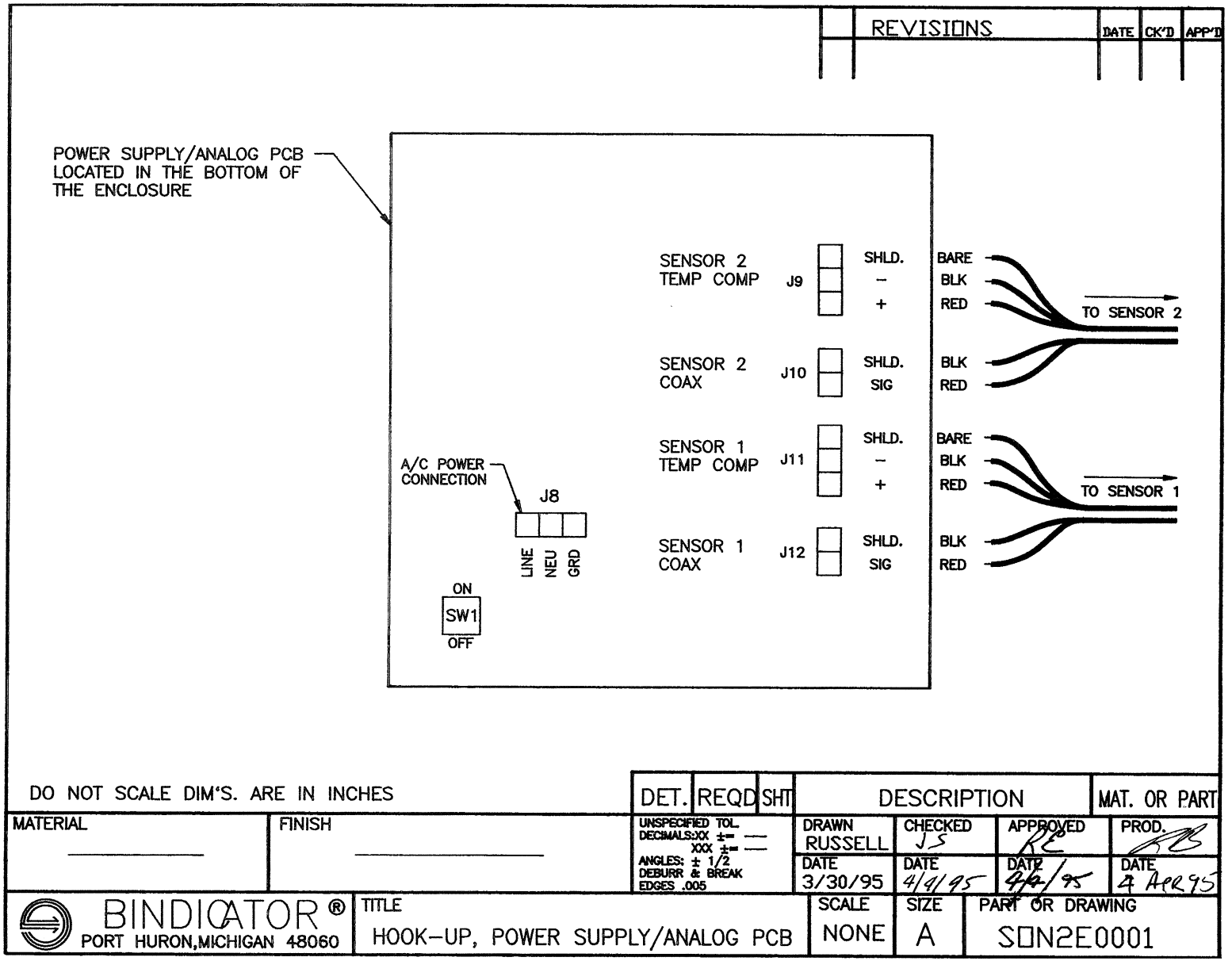
REVISIONS
DATE
CK'D
APP'D
POWER SUPPLY/ANALOG PCB LOCATED IN THE BOTTOM OF THE ENCLOSURE
SENSOR 2 TEMP COMP
J9
SHLD.
–
+
BARE
BLK
RED
TO SENSOR 2
SENSOR 2 COAX
J10
SHLD.
SIG
BLK
RED
SENSOR 1 TEMP COMP
J11
SHLD.
–
+
BARE
BLK
RED
TO SENSOR 1
SENSOR 1 COAX
J12
SHLD.
SIG
BLK
RED
A/C POWER CONNECTION
J8
LINE
NEU
GRD
ON
SW1
OFF
DO NOT SCALE DIM'S. ARE IN INCHES
DET.
REQD
SHT
DESCRIPTION
MAT. OR PART
MATERIAL
FINISH
UNSPECIFIED TOL.
DECIMALS:XX ±= —
XXX ±= —
ANGLES: ± 1/2
DEBURR & BREAK EDGES .005
DRAWN RUSSELL
CHECKED JS
APPROVED RE
PROD.
DATE 3/30/95
DATE 4/4/95
DATE 4/4/95
DATE 4 APR 95
BINDICATOR®
PORT HURON, MICHIGAN 48060
TITLE
HOOK-UP, POWER SUPPLY/ANALOG PCB
SCALE NONE
SIZE A
PART OR DRAWING
SON2E0001

APPENDIX C

ENCLOSURE AND SENSORS

MOUNTINGS & DIMENSIONS

SON2E0002	Electronic / Display Outline Drawing
SON2E0034	MS-100 Noryl Sensor Outline Drawing
SON2E0003	MS-100 PVC Sensor Outline Drawing
SON2E0038	MS-60 Noryl Sensor Outline Drawing
SON2E0037	MS-30 PVC Sensor Outline Drawing
SON2E0004	MS-25 PVC Sensor Outline Drawing
SON2E0006	Junction Box Outline Drawing
SON2E0010	Isolation Mount Outline Drawing

DATA BLOCK

ENCLOSURE: MOLDED FIBERGLASS REINFORCED POLYESTER (NEMA 4X)

	REVISIONS	DATE	CK'D	APP'D
A	MS-2000 SERIES WAS MICROSONIC PER ECO #96-085 CR	10/4 96		JJ

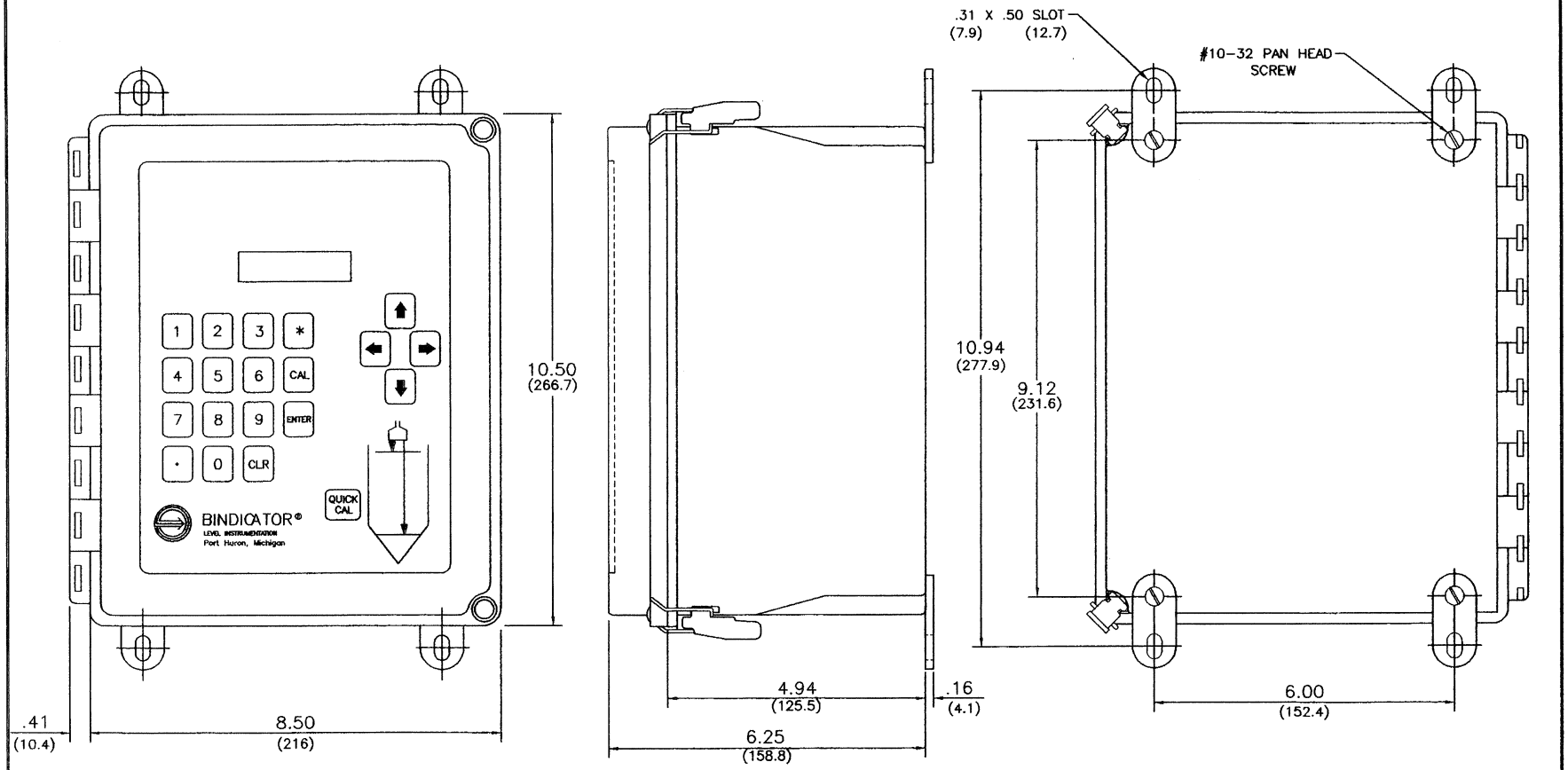

BRACK'T DIM ARE IN MM'S
DO NOT SCALE DIM'S. ARE IN INCHES

DET.	REQD	SHT	DESCRIPTION	MAT. OR PART

MATERIAL	FINISH	UNSPECIFIED TOL. DECIMALS: XX ±= .06, XXX ±= .06, ANGLES: ± 1/2°, DEBURR & BREAK EDGES .005	DRAWN	CHECKED	APPROVED	PROD.	MARKETING
			RUSSELL	BOB	WJR	RB	C.C.
			DATE 4/11/95	DATE 4/11/95	DATE 4/18/95	DATE 4/21/95	DATE 4/11/95

BINDICATOR® PORT HURON, MICHIGAN 48060	TITLE	SCALE	SIZE	PART OR DRAWING
	CUSTOMER OUTLINE DRAWING MS-2000 SERIES DISPLAY	1/2	B	SON2E0002

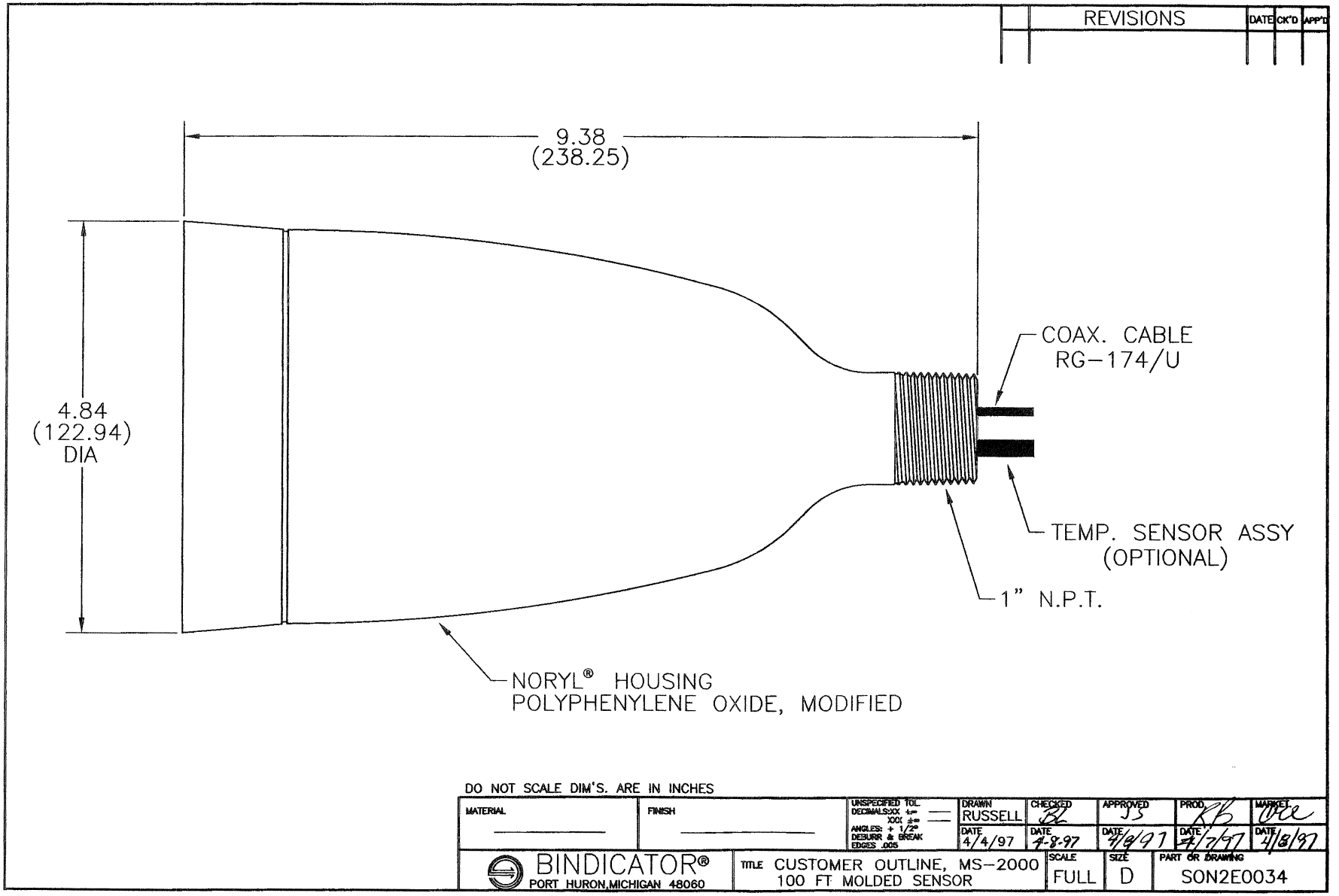
REVISIONS
DATE
CK'D
APP'D
9.38
(238.25)
4.84
(122.94)
DIA
COAX. CABLE
RG-174/U
TEMP. SENSOR ASSY
(OPTIONAL)
1" N.P.T.
NORYL® HOUSING
POLYPHENYLENE OXIDE, MODIFIED
DO NOT SCALE DIM'S. ARE IN INCHES
MATERIAL
FINISH
UNSPECIFIED TOL.
DECIMALS: XX ±.01
XXX ±.005
ANGLES: ± 1/2°
DEBURR & BREAK EDGES .005
DRAWN RUSSELL 4/4/97
CHECKED 4-8-97
APPROVED 4/8/97
PROD. 4/7/97
MARKET 4/8/97
BINDICATOR®
PORT HURON, MICHIGAN 48060
TITLE CUSTOMER OUTLINE, MS-2000
100 FT MOLDED SENSOR
SCALE FULL
SIZE D
PART OR DRAWING SON2E0034

	REVISIONS	DATE	CK'D	APP'D
A	MS-100 WAS ST-100 AC	8/10 95	RUSS	WJR
B	MS-2000 SERIES WAS MICROSONIC PER ECO #96-085 CR	10/4 96		JS

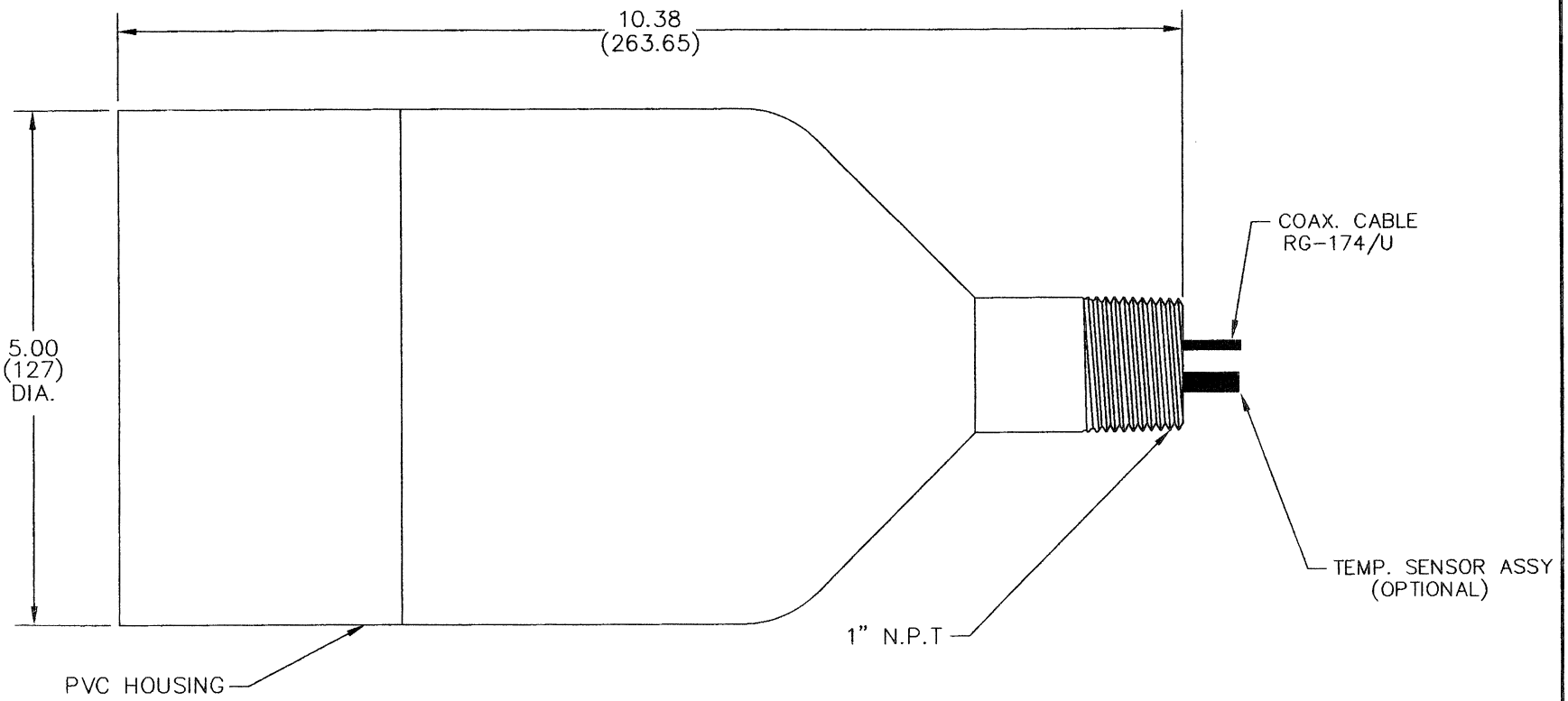

DO NOT SCALE DIM'S. ARE IN INCHES

DET.	REQD	SHT	DESCRIPTION	MAT. OR PART

MATERIAL	FINISH	UNSPECIFIED TOL. DECIMALS XX ±= XXX ±= ANGLES ± 1/2° DEBURR & BREAK EDGES .005	DRAWN	CHECKED	APPROVED	PROD.
			ARIC C.	RUSSELL	WJR	RB
			DATE 6/21/95	DATE 7/6/95	DATE 7/6/95	DATE 7/6/95

BINDICATOR®
PORT HURON, MICHIGAN 48060

TITLE	SCALE	SIZE	PART OR DRAWING
CUSTOMER OUTLINE MS-2000 SERIES 100 FT SENSOR	FULL	B	SON2E0003

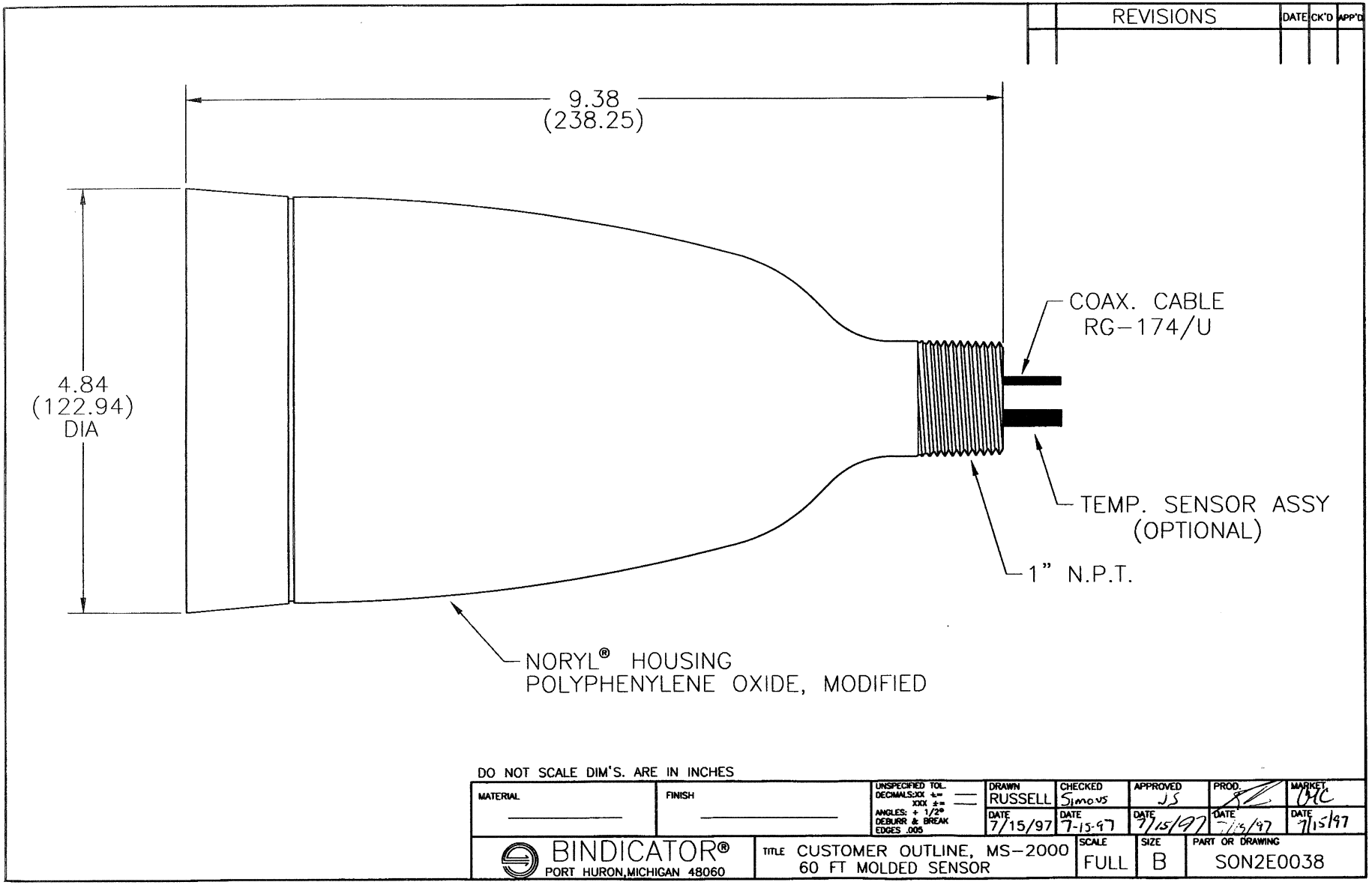
REVISIONS
DATE
CK'D
APP'D
9.38
(238.25)
4.84
(122.94)
DIA
COAX. CABLE
RG-174/U
TEMP. SENSOR ASSY
(OPTIONAL)
1" N.P.T.
NORYL® HOUSING
POLYPHENYLENE OXIDE, MODIFIED
DO NOT SCALE DIM'S. ARE IN INCHES
MATERIAL
FINISH
UNSPECIFIED TOL.
DECIMALS:XX ±=
XXX ±=
ANGLES: ± 1/2°
DEBURR & BREAK
EDGES .005
DRAWN
RUSSELL
DATE
7/15/97
CHECKED
Simons
DATE
7-15-97
APPROVED
JS
DATE
7/15/97
PROD.
DATE
7/15/97
MARKET
DATE
7/15/97
BINDICATOR®
PORT HURON, MICHIGAN 48060
TITLE
CUSTOMER OUTLINE, MS-2000
60 FT MOLDED SENSOR
SCALE
FULL
SIZE
B
PART OR DRAWING
SON2E0038

REVISIONS	DATE	CK'D	APP'D

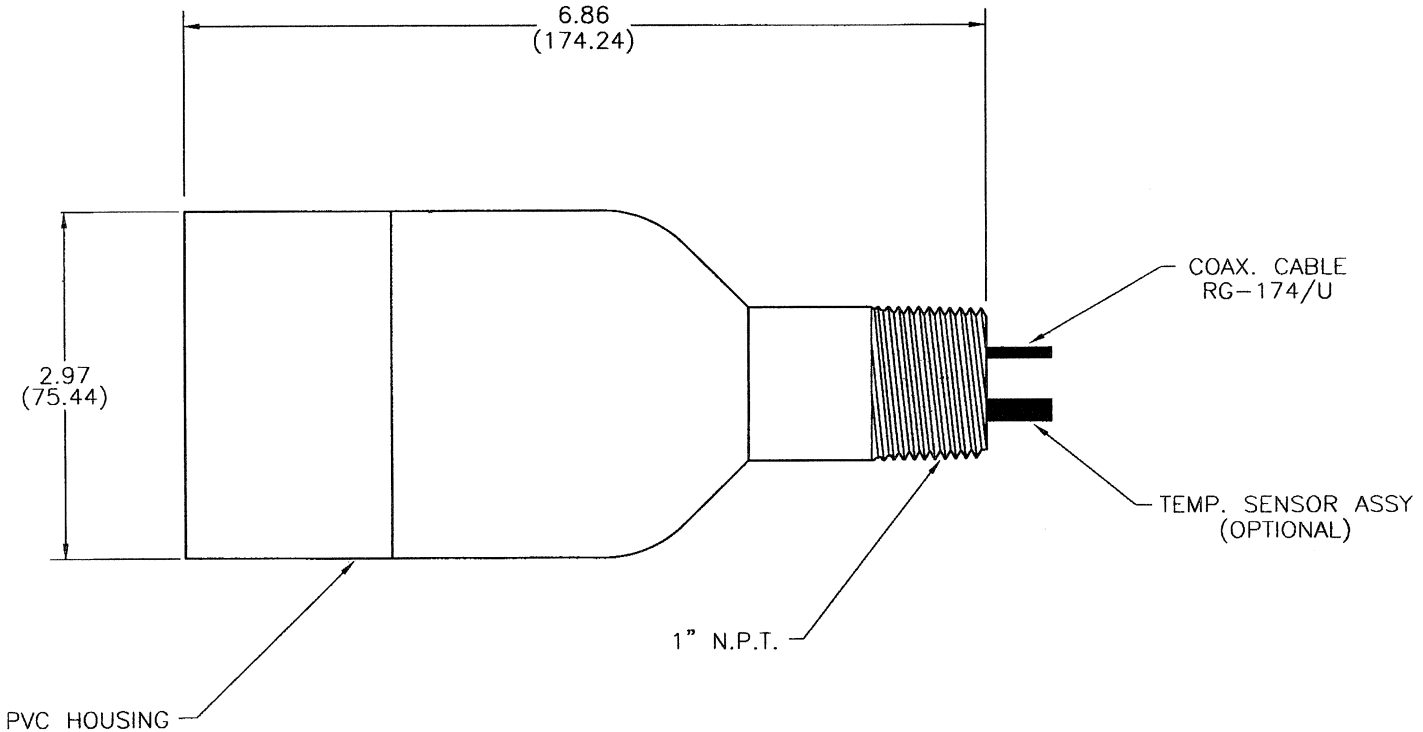

BRACKETED DIM'S ARE IN MM
DO NOT SCALE DIM'S. ARE IN INCHES

MATERIAL	FINISH	UNSPECIFIED TOL. DECIMALS: XX ±= XXX ±= ANGLES: ± 1/2° DEBURR & BREAK EDGES .005	DRAWN	CHECKED	APPROVED	MARKET.	PROD.
			RUSSELL	Simons	JS	CW	
			DATE 7/15/97	DATE 7-15-97	DATE 7/15/97	DATE 7/15/97	DATE 7-1-97

BINDICATOR® PORT HURON, MICHIGAN 48060	TITLE CUSTOMER OUTLINE MS-2000 SERIES 30 FT SENSOR	SCALE	SIZE	PART OR DRAWING
		NONE	B	SON2E0037

	REVISIONS	DATE	CK'D	APP'D
A	MS-2000 SERIES WAS MICROSONIC PER ECO #96-085 CR	10/4 96	PJ	JS

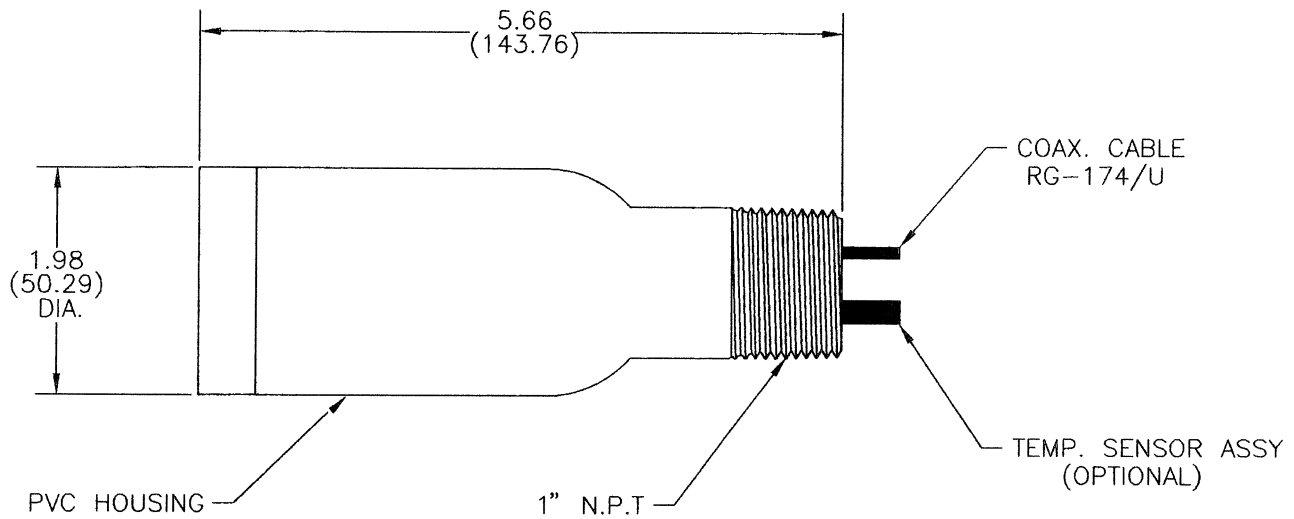

DO NOT SCALE DIM'S. ARE IN INCHES

DET.	REQD	SHT	DESCRIPTION	MAT OR PART

MATERIAL	FINISH	UNSPECIFIED TOL. DECIMALS XX ±= .010 XXX ±= .010 ANGLES ± 1/2° DEBURR & BREAK EDGES .005	DRAWN	CHECKED	APPROVED	PROD.	MARKET.
			ARIC C.	RUSSELL	WJR	RB	CC
			DATE 7/20/95	DATE 7/31/95	DATE 8/4/95	DATE 8/7/95	DATE 7/31/95

BINDICATOR® PORT HURON, MICHIGAN 48060	TITLE	SCALE	SIZE	PART OR DRAWING
	CUSTOMER OUTLINE MS-2000 SERIES 25 FT SENSOR	FULL	B	SON2E0004

REVISIONS	DATE	CK'D	APP'D

DATA BLOCK

BASE: GLASS FILLED GREY POLYCARBONATE
COVER: GREY POLYCARBONATE
KNOCK–OUT SIZES: PG13.5
PG16
PG21

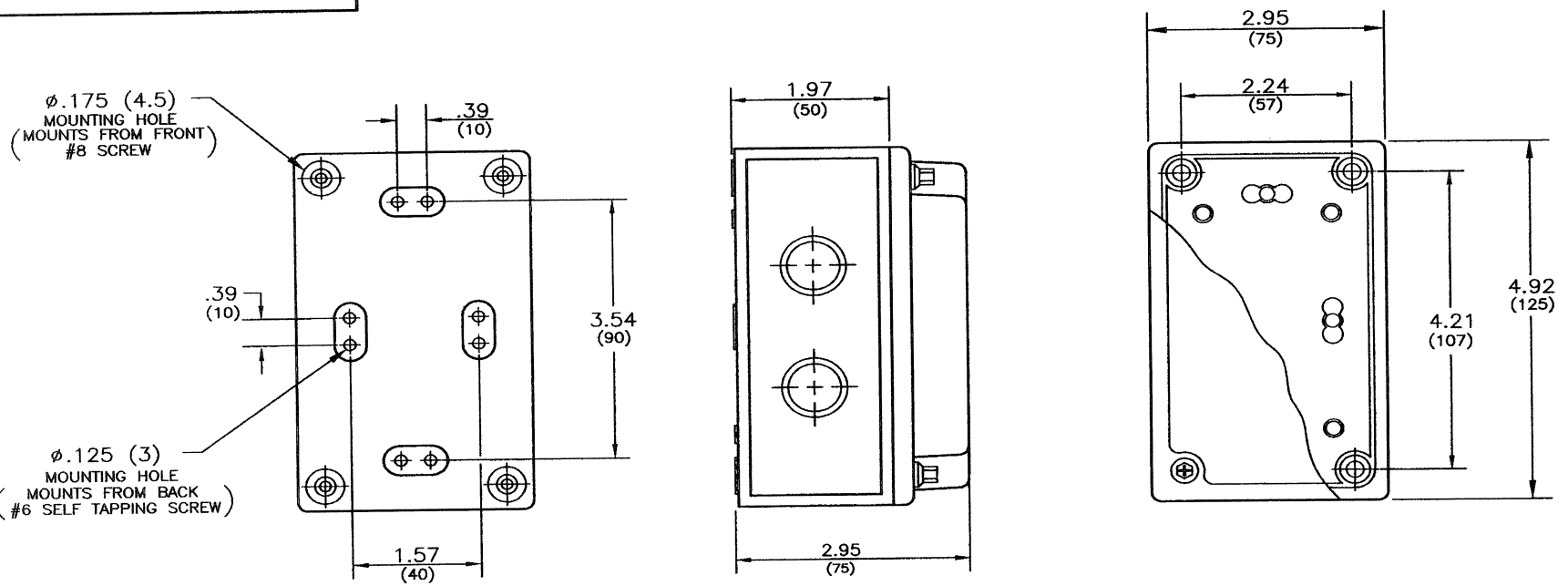

BACK VIEW SHOWING
MOUNTING HOLE LOCATIONS

DET.	REQD	SHT	DESCRIPTION	MAT. OR PART

DO NOT SCALE DIM'S. ARE IN INCHES

MATERIAL	FINISH	UNSPECIFIED TOL. DECIMALS XX ± — XXX ± — ANGLES: ± 1/2° DEBURR & BREAK EDGES .005	DRAWN	CHECKED	APPROVED	PROD.	MARKET.
—	—		ARIC 8/8/95	RUSSELL 8-23-95	DATE 8/25/95	DATE 8/28/95	DATE 8/28/95

BINDICATOR® PORT HURON, MICHIGAN 48060	TITLE	SCALE	SIZE	PART OR DRAWING
	CUSTOMER OUTLINE JUNCTION BOX	3/4	B	SON2E0006

	REVISIONS	DATE	CK'D	APP'D
A	MS-2000 SERIES WAS MICROSONIC PER ECO #96-085 CR	10/4 96		JS

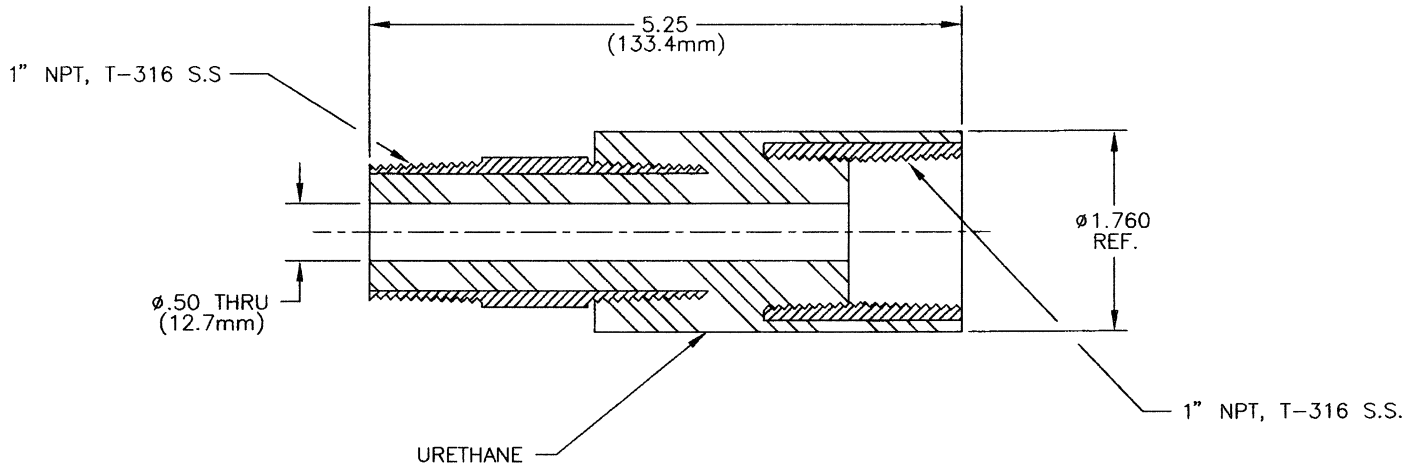

BRACK'T. DIM'S ARE IN MM.
DO NOT SCALE DIM'S. ARE IN INCHES

MATERIAL	FINISH	UNSPECIFIED TOL. DECIMALS: XX ±— XXX ±— ANGLES: ± 1/2° DEBURR & BREAK EDGES .005	DRAWN	CHECKED	APPROVED	PROD.	MARKET.
			RUSSELL	BOB	WALT	RB	CC
			DATE 9/28/95	DATE 9/29/95	DATE 9/29/95	DATE 9/29/95	DATE 9/28/95

BINDICATOR® PORT HURON, MICHIGAN 48060	TITLE CUSTOMER OUTLINE MS-2000 SERIES ISOLATION MOUNT	SCALE	SIZE	PART OR DRAWING
		FULL	B	SON2E0010

APPENDIX D

DIAGNOSTICS GROUP - EACH SENSOR POSITION

The parameters in the diagnostic group represent the values measured or set during the last measurement cycle for a given sensor position. Some of the values are directly changeable at the highest access level

ABSOLUTE DISTANCE (NOT USER-CHANGEABLE)

The distance from the Sensor face to the material surface, indepen dent of the FULL and EMPTY settings. In the case of an erroneous reading or a reading that does not follow what is actually in the bin, check this Function. In most cases this distance will show that the system is seeing an echo from an obstruction, side wall build up, a ladder or other obstructions in the bin. Re-mounting the Sensor in a better location will solve the problem.

TEMPERATURE (NOT USER-CHANGEABLE)

The temperature as reported by the temperature Sensor connected to the Sensor position. If there is a consistent error in the level reading check this Function to see if there is a value that makes sense.
If the Temp Comp is not connected the system defaults to 68 degrees Fahrenheit. Therefore if the bin is actually at 110 degrees Fahrenheit this can represent an error of 4 to 5 percent, in the level reading. If the number in this Function is unusually high or low or is fluctuating over a wide range then follow the test check list in
Section 7.0 Troubleshooting.

TX FREQUENCY (NUMERIC ENTRY)

The transmitter frequency in Khz. This is a number that represents the frequency of the Sensor in Khz. If the number is wrong then set it to the correct frequency number: MS-100 = 20, MS-60 = 20, MS-30 = 9, and MS-25 = 6.

TX AMPLITUDE (NUMERIC ENTRY)

The transmit pulse amplitude in percent. This represents the actual power being applied to the Sensor. If an ECHO LOST condition is present and this Function is at maximum, then check the Sensor and Sensor wiring per SECTION 7.0.

TX CYCLES (NUMERIC ENTRY)

The number of transmit cycles. This number is fixed and cannot be changed. It represents the number of cycles of the appropriate Fre quency that is being applied to the Sensor. If this number is incorrect per the Sensor you are firing, then re-set defaults in the BASIC SETUP GROUP, this will reset the value to the correct Sensor.

RECEIVER GAIN (NUMERIC ENTRY)

The receiver base gain setting, range is 0 to 1000. If this is at or near maximum reference *Section 7.0*.

RECEIVER TVG (NUMERIC ENTRY)

The receiver time variable gain end-point setting, the range is 0 to 1000. If this Function is at or near maximum, reference *Section 7.0*.

RECEIVED NOISE (NOT USER-CHANGEABLE)

A relative indication of the amount of ambient or electrical noise picked up by the Sensor before firing it. The range for this Function is 0 to 255. If this number is high or at maximum then consult *Section 7.0*.

APPENDIX E

BINDICATOR MODEL MS-100 ULTRASONIC SENSOR BEAM ANGLE CHART

Recommended minimum distance from the vessel wall.

Vessel Height	Distance from wall
5 feet	8 inches
10 feet	14 inches
15 feet	20 inches
20 feet	26 inches
25 feet	31 inches
30 feet	37 inches
35 feet	43 inches
40 feet	49 inches
45 feet	54 inches
50 feet	60 inches
55 feet	66 inches
60 feet	72 inches
65 feet	78 inches
70 feet	83 inches
75 feet	89 inches
80 feet	95 inches
85 feet	101 inches
90 feet	106 inches
95 feet	112 inches
100 feet	118 inches

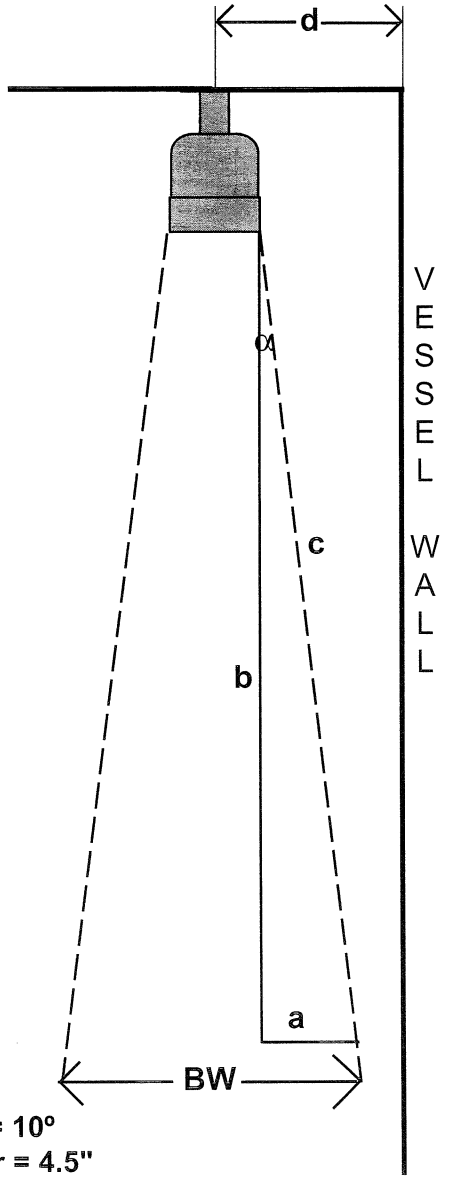

Beam Angle = 10°
Sensor Diameter = 4.5"
BW = [(Tan 5°) x Vessel Height x 2] + 4.5"
Tangent of 5° = .0875

To calculate the recommended minimum distance from the vessel wall at any point not shown, use the following formula:

D = [H x (Tan 5°) + 2.25] x 1.1

Where D is the recommended minimum distance from the vessel wall in inches, H is the height of the vessel in inches, Tan 5° is .0875, 2.25 is one half of the diameter of the sensor face, and 1.1 multiplier maintains a 10% safety factor.

Models 2001 & 2010 Level Monitor User Interface

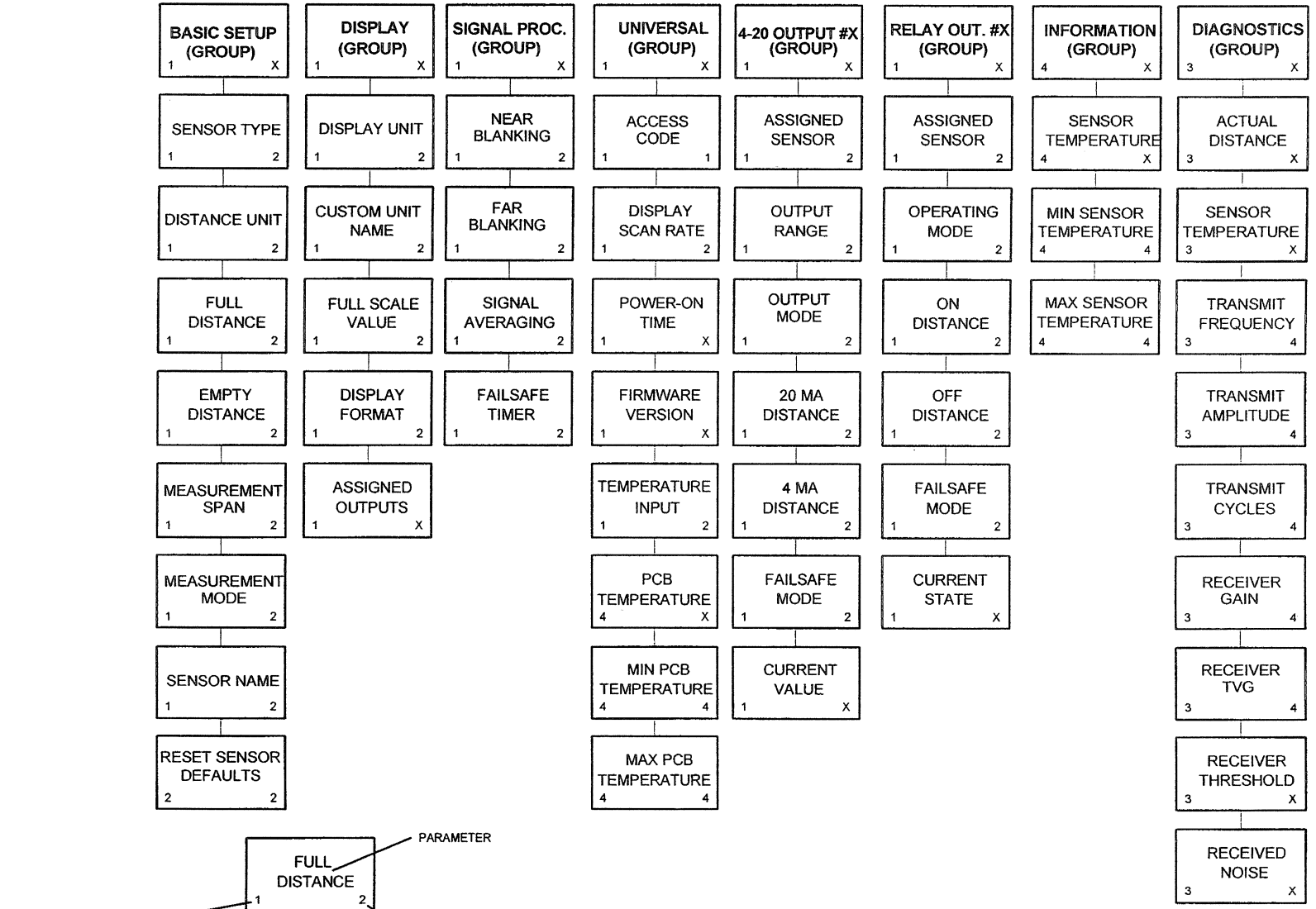

9/15/97

APPENDIX G

Micro-Sonic 2001
Calibration and Diagnostic Parameters

Date		
	Customer Name	
Parameter	Sensor (1)	Sensor (2)
Distance Unit		
Full Distance		
Empty Distance		
Measurement Span		
Measurement Mode		
Sensor Name		
Display Unit		
User Unit Name		
Full Scale Value		
Display Format		
Near Blanking		
Far Blanking		
Signal Averaging		
Fail-Safe Timer		
Access Code		
Display Scan Rate		
Firmware Version		
Local RS-232 Port		
TX Frequency		
TX Amplitude		
TX Cycles		
RX Gain		
RX TVG		
RX Threshold		
RX Noise		
Temperature		
Actual Distance		

For information, specification, and engineering assistance with any BINDICATOR® product...

Contact your local distributor/representative or the factory.

Bindicator offers a complete range of Level and Flow Controls

Electro-Mechanical Point Level Controls
- Roto-Bin-Dicator®
- Mini-Roto-Bin-Dicator®
- Super-Safe Roto-Bin-Dicator®
- Model A Bin-Dicator®
- Auto Bin-Dicator®
- Bantam Bin-Dicator®
- Liquid Level Bin-Dicator®

RF Capacitance Level Controls

RF-4000	RF-9200
RF-6000	RF-10000
RF-8000	RF-11000
RF-8200	RF-12000
RF-9000	RF-17000
RF-9100	RF-18000

Sonic Level Controls
- MS-2000™ Series

Dry Flow
- Bin-Flo®
- Flo-Guard™
- Flo-Commander™

Tuning Fork Level Controls
- Pulse Point™

Continuous Level Contorls
- Bindicator Yo-Yo®
- AR-1000®
- Cap-Level® II & IIA
- Radar Tracker®

Liquid Level Controls
- Tracker®
- Leveldata
- Mach One™
- Eagle™

the best available technology...

BINDICATOR®

ISO 9001 QUALITY - LEVEL & FLOW

150 Venture Boulevard
Spartanburg, SC 29306
Phone: (864) 574-8060, **Fax:** (864) 574-8063
Customer Service: (800) 778-9242
Internet: http//www.bindicator.com
email: sales@bindicator.com